Kudos 108

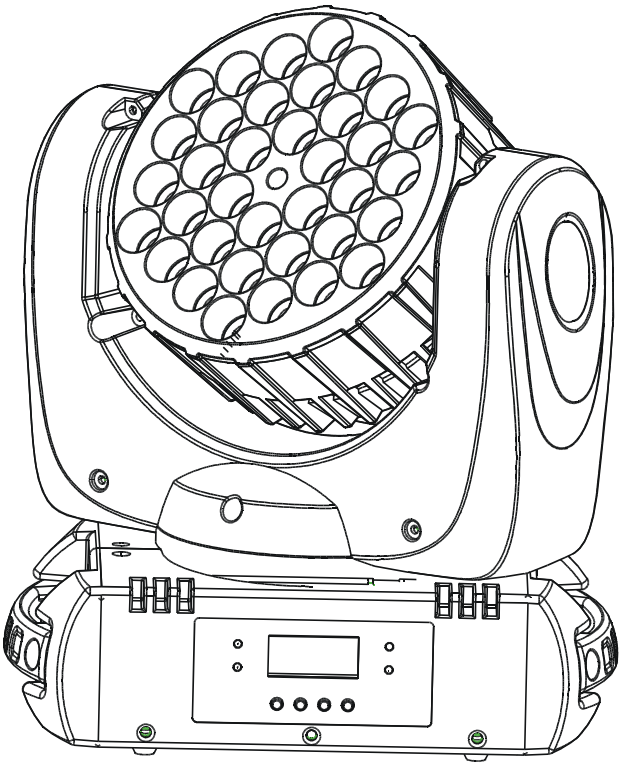

Order code: ELUM030

User Guide

Professional Entertainment Technology

TABLE OF CONTENTS

1. Safety Instruction

2. Features and Technical Specifications

3. How To Set Up The Unit

4. How To Control The Unit

5. Troubleshooting

6. Fixture Cleaning

1. Safety Instruction

WARNING

Please read carefully the instruction, which includes important information about the installation, usage and maintenance.

- Please keep this User Guide for future consultation. If you sell the unit to another user, be sure that they also receive this instruction booklet.
- Unpack and check carefully there is no transportation damage before using the unit.
- Before operating, ensure that the voltage and frequency of power supply match the power requirements of the unit.
- It's important to ground the yellow/green conductor to earth in order to avoid electric shock.
- The unit is for indoor use only. Use only in a dry location.
- The unit must be installed in a location with adequate ventilation, at least 50cm from adjacent surfaces. Be sure that no ventilation slots are blocked.
- Disconnect main power before replacement or servicing.
- Make sure there is no flammable materials close to the unit while operating as it is fire hazard.
- Use safety cable when fixes this unit. Don't handle the unit by taking its head only, but always by taking its base.
- Maximum ambient temperature is ta: 40℃. Don't operate it where the temperature is higher than this.
- Unit surface temperature may reach up to 85℃. Don't touch the housing bare-hand during its operation. Turn off the power and allow about 15

minutes for the unit to cool down before replacing or serving.

- In the event of serious operating problem, stop using the unit immediately. Never try to repair the unit by yourself. Repairs carried out by unskilled people can lead to damage or malfunction. Please contact the nearest authorized technical assistance center. Always use the same type spare parts.
- Do not touch any wire during operation as high voltage might be causing electric shock.

Warning

- To prevent or reduce the risk of electrical shock or fire, do not expose the unit to rain or moisture.
- Do not open the unit within five minutes after switching off.
- The housing, the lenses, or the ultraviolet filter must be replaced if they are visibly damaged.

Caution

There are no user serviceable parts inside the unit. Do not open the housing or attempt any repairs yourself. In the unlikely event your unit may require service, please contact your nearest dealer.

Installation

The unit should be mounted via its screw holes on the bracket. Always ensure that the unit is firmly fixed to avoid vibration and slipping while operating. And make sure that the structure to which you are attaching the unit is secure and is able to support a weight of 10 times of the unit’s weight. Also always use a safety cable that can hold 12 times of the weight of the

unit when installing the fixture.

The equipment must be fixed by professionals. And it must be fixed at a place where is out of the touch of people and has no one pass by or under it.

2. Features and Technical Specification

- DMX Channels: 1/9/12/16
- Pan/Tilt: 630°/240°, speed adjustable
- Smooth electronic dimming: 0-100%
- Electronic strobe with pulse and random effects
- Optional easy controller CA-8 or CA-9 RTX
- High efficiency, low power consumption
- Super compact, low weight
- Voltage: 100V~240V, 50/60Hz
- Fuse: T 6.3A
- Power consumption: 110W
- Light source: 36 x 3W LEDs (R8, G10, B10,W8)
- Dimension: 304 x 267 x 167 mm
- Weight: 5.7kgs

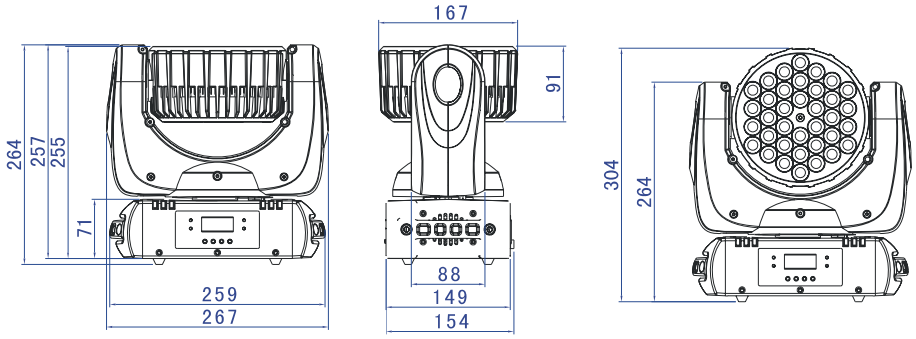

Photometric diagram:

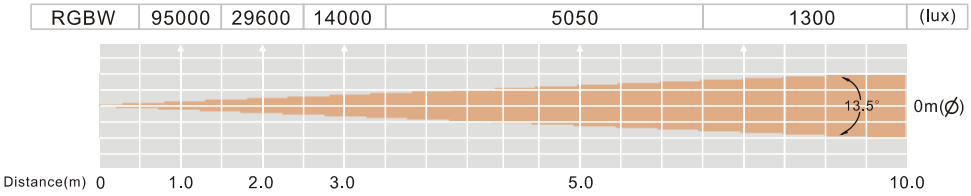

3. How To Set The Unit

3.1 Control panel

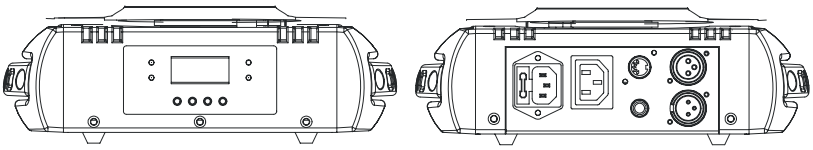

Display

To show the various menus and the selected functions

LED

DMX	On	DMX input present
MASTER	On	Master Mode
SLAVE	On	Slave Mode
SOUND	Flashing	Sound activation

Button

MENU	To select the programming functions
DOWN	To go backward in the selected functions
UP	To go forward in the selected functions
ENTER	To confirm the selected functions

Only for remote control

Connecting with CA-8/CA-9/CA-9RTX to control the unit for Stand by, Function and Mode function.

Mains input

Connect to power supply.

Mains output

Connect to supply power to the next unit.

DMX input/output

For DMX512 link, use 3/5-pin XLR cable to link the unit together.

3.2 Main Function

To select any of the given functions, press the **MENU** button up to when the required one is showing on the display. Select the function by **ENTER** button and the display will blink. Use **DOWN** and **UP** button to change the mode. Once the required mode has been selected, press the **ENTER** button to setup, to go back to the functions without any change press the **MENU** button again. Hold and press the **MENU** button about one second or wait for one minute to exit the menu mode.

The main functions are showing below:

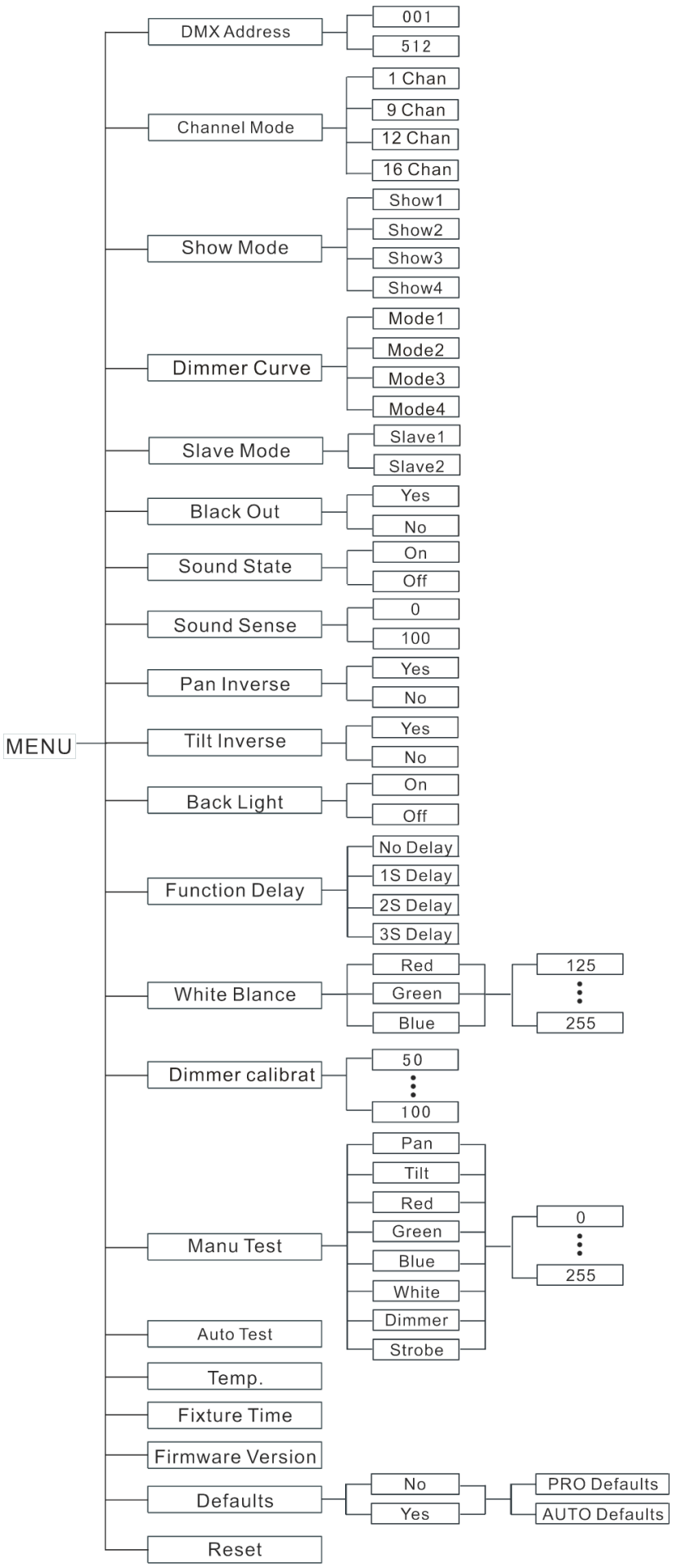
MENU
DMX Address
001
512
Channel Mode
1 Chan
9 Chan
12 Chan
16 Chan
Show Mode
Show1
Show2
Show3
Show4
Dimmer Curve
Mode1
Mode2
Mode3
Mode4
Slave Mode
Slave1
Slave2
Black Out
Yes
No
Sound State
On
Off
Sound Sense
0
100
Pan Inverse
Yes
No
Tilt Inverse
Yes
No
Back Light
On
Off
Function Delay
No Delay
1S Delay
2S Delay
3S Delay
White Blance
Red
Green
Blue
125
255
Dimmer calibrat
50
100
Manu Test
Pan
Tilt
Red
Green
Blue
White
Dimmer
Strobe
0
255
Auto Test
Temp.
Fixture Time
Firmware Version
Defaults
No
Yes
PRO Defaults
AUTO Defaults
Reset

DMX Address

Select **DMX Address**, press the **ENTER** button to confirm, the present address will blink on the display. Use the **UP** and **DOWN** button to adjust the address from **1** to **512**. Once the address has been selected, press the **ENTER** button to setup, to go back to the functions without any change press the **MENU** button again. Hold and press the **MENU** button about one second or wait for one minute to exit the menu mode.

Channel Mode

Select **Channel mode**, press the **ENTER** button to confirm, the present address will blink on the display. Use the **UP** and **DOWN** button to select 9channels (mode1), 12channels (mode2), 16channels (mode3). Once the channel mode has been selected, press the **ENTER** button to setup, to go back to the functions without any change press the **MENU** button again. Hold and press the **MENU** button about one second or wait for one minute to exit the menu mode.

Show Mode

Select **Show Mode**, press the **ENTER** button to confirm, present mode will blink on the display. Use the **DOWN** and **UP** button to select the **Show 1** or **Show 2** or **Show 3** or **Show 4** mode. Once the mode has been selected, press the **ENTER** button to setup, to go back to the functions without any change press the **MENU** button again. Hold and press the **MENU** button

about one second or wait for one minute to exit the menu mode.

Dimmer Curve

Select **Dimmer Curve**, press the **ENTER** button to confirm, present mode will blink on the display. Use the **DOWN** and **UP** button to select the **mode 1** or **mode 2** or **mode 3** or **mode 4** mode. Once the mode has been selected, press the **ENTER** button to setup, to go back to the functions without any change press the **MENU** button again. Hold and press the **MENU** button about one second or wait for one minute to exit the menu mode.

Dimmer Modes

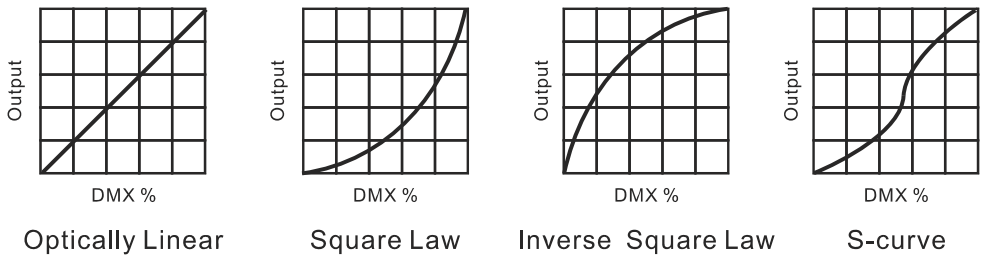

Mode 1(Optically Linear): The increase in light intensity appears to be linear as DMX value is increased.

Mode 2(Square Law): Light intensity control is finer at low levels and coarser at high levels.

Mode 3(Inverse Square Law): Light intensity control is coarser at low levels and finer at high levels.

Mode 4(S-cure): Light intensity control is finer at low levels and high levels and coarser at medium levels.

Slave Mode

Select **Slave Mode**, press the **ENTER** button to confirm, present mode will blink on the display. Use the **DOWN** and **UP** button to select the **Slave 1** (normal) or **Slave 2** (2 light show) mode. Once the mode has been selected, press the **ENTER** button to setup, to go back to the functions without any change press the **MENU** button again. Hold and press the **MENU** button about one second or wait for one minute to exit the menu mode.

Black Out

Select **Slave Mode**, press the **ENTER** button to confirm, present mode will blink on the display. Use the **DOWN** and **UP** button to select the **Yes** (yes blackout) or **No** (no blackout) mode. Once the mode has been selected, press the **ENTER** button to setup, to go back to the functions without any change press the **MENU** button again. Hold and press the **MENU** button about one second or wait for one minute to exit the menu mode.

Sound State

Select **Sound State**, press the **ENTER** button to confirm, present mode will blink on the display. Use the **DOWN** and **UP** button to select the **On** (sound on) or **Off** (sound off) mode. Once the mode has been selected, press the **ENTER** button to setup, to go back to the functions without any change press the **MENU** button again. Hold and press the **MENU** button about one second or wait for one minute to exit the menu mode.

Sound Sense

Select **Sound Sense**, press the **ENTER** button to confirm, present mode will blink on the display. Use the **DOWN** and **UP** button to select the **0** …**100** mode. Once the mode has been selected, press the **ENTER** button to setup, to go back to the functions without any change press the **MENU** button again. Hold and press the **MENU** button about one second or wait for one minute to exit the menu mode.

Pan Inverse

Select **Pan Inverse**, press the **ENTER** button to confirm, present mode will blink on the display. Use the **DOWN** and **UP** button to select the **Yes** (pan inversion) or **No** (normal) mode. Once the mode has been selected, press the **ENTER** button to setup, to go back to the functions without any change press the **MENU** button again. Hold and press the **MENU** button about one second or wait for one minute to exit the menu mode.

Tilt Inverse

Select **Pan Inverse**, press the **ENTER** button to confirm, present mode will blink on the display. Use the **DOWN** and **UP** button to select the **Yes** (tilt inversion) or **No**(normal) mode. Once the mode has been selected, press the **ENTER** button to setup, to go back to the functions without any change press the **MENU** button again. Hold and press the **MENU** button about one second or wait for one minute to exit the menu mode.

Back Light

Select **Back Light**, press the **ENTER** button to confirm, present mode will blink on the display. Use the **DOWN** and **UP** button to select the **On** (Led on) or **Off** (Led off) mode. Once the mode has been selected, press the **ENTER** button to setup, to go back to the functions without any change press the **MENU** button again. Hold and press the **MENU** button about one second or wait for one minute to exit the menu mode.

Function Delay

Select **Function Delay,** press ENTER button to confirm, present mode will blink on the display. Use **DOWN** and **UP** button to select the **No Delay** or **1S/2S/3S Delay** (Wait for 1/2/3 seconds before these Functions of 12CH are activated/deactivated) mode. Once the mode has been selected, press the **ENTER** button to setup, to go back to the functions without any change press the **MENU** button again. Hold and press the **MENU** button about one second or wait for one minute to exit the menu mode.

White Balance

Select **White Balance**, press the **ENTER** button to confirm, present mode will blink on the display. Use the **DOWN** and **UP** button to select the **Red** or **Green** or **Blue**. Once the mode has been selected, press the **ENTER** button to setup, use the **DOWN** and **UP** button to change the value (125~255). Once the mode has been selected, press the **ENTER** button to setup, go

back to the functions without any change press the **MENU** button again. Hold and press the **MENU** button about one second or wait for one minute to exit the menu mode.

Dimmer Calibrated

Select **Dimmer calibrated**, press the **ENTER** button to confirm, present mode will blink on the display. Use the **DOWN** and **UP** button to change the value (50~100). Once the mode has been selected, press the **ENTER** button to setup, go back to the functions without any change press the **MENU** button again. Hold and press the **MENU** button about one second or wait for one minute to exit the menu mode.

Manu Test

Select **Manu Test**, press the **ENTER** button to confirm, present mode will blink on the display. Use the **DOWN** and **UP** button to select the **Pan/ Tilt/ Red**/ **Green**/ **Blue/ White/ Dimmer** or **Strobe**. Once the mode has been selected, press the **ENTER** button to setup, use the **DOWN** and **UP** button to change the value (0~255). Once the mode has been selected, press the **ENTER** button to setup, go back to the functions without any change press the **MENU** button again. Hold and press the **MENU** button about one second or wait for one minute to exit the menu mode.

Auto-Test

Press the **MENU** button up to when the **Auto-Test** is blinking on the display. Pressing **ENTER** button and the unit will run self-test by built-in program. To go back to the functions press the **MENU** button again. Hold and press the **MENU** button about one second or wait for one minute to exit the menu mode.

Temperature

Press the **MENU** button up to when the **Temperature Test** is blinking on the display. Pressing **ENTER** button and the display will show the temperature of the unit. To go back to the functions press the **MENU** button again. Hold and press the **MENU** button about one second or wait for one minute to exit the menu mode.

Fixture Time

Press the **MENU** button up to when the **Fixture Time** is blinking on the display. Pressing **ENTER** button and the display will show the number of working hours of the unit. To go back to the functions press the **MENU** button again. Hold and press the **MENU** button about one second or wait for one minute to exit the menu mode.

Firmware Version

Press the **MENU** button up to when the **Firmware version** is blinking on the

display. Pressing **ENTER** button and the display will show the version of software of the unit. To go back to the functions press the **MENU** button again. Hold and press the **MENU** button about one second or wait for one minute to exit the menu mode.

Defaults Setting -

Press the **MENU** button to show **Defaults** on the display. Press the **ENTER** button and the display will blink. Use the **DOWN** and **UP** button to select the **YES** or **No**. Once the **Yes** has been selected, press the **ENTER** button and use the **UP** and **Down** button to select the **PRO Defaults** or **AUTO Defaults**.

PRO Defaults: For professional users, detailed explanation as followings:

- ☞ ***Slave Mode*** → **Slave 1**
- ☞ ***Black Out*** → **Yes**
- ☞ ***Sound State*** → **Off**
- ☞ ***Pan Inverse*** → **No**
- ☞ ***Tilt Inverse*** → **No**
- ☞ ***Back Light*** → **Off**
- ☞ ***Function Delay*** → **3S Delay**

AUTO Defaults: Mostly automatic mode, for non professional users, detailed explanation as followings:

- ☞ ***Slave Mode*** → **Slave 1**
- ☞ ***Black Out*** → **No**
- ☞ ***Sound State*** → **On**
- ☞ ***Pan Inverse*** → **No**
- ☞ ***Tilt Inverse*** → **No**
- ☞ ***Back Light*** → **On**
- ☞ ***Function Delay*** → **3S Delay**

(**Notice**: Other settings are NOT changed while choosing Defaults Setting!)

Press the **ENTER** and the corresponding functions will set to defaults setting, to go back to the functions without any change press the **MENU** button again. Hold and press the **MENU** button about one second or wait for one minute to exit the menu mode.

Reset

Press the **MENU** button up to when the **Reset** is blinking on the display. Pressing **ENTER** button and all channels of the unit will return to their standard position.

3.3 Home Position Adjust

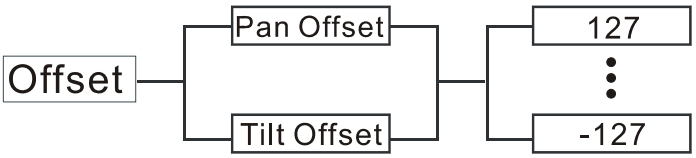

In the main functions, hold **Enter** button for at least 3 seconds into offset mode, use **DOWN** and **UP** button up to chose **Pan Offset** or **Tilt Offset**, pressing **ENTER** button and the display will blink. Use **DOWN** and **UP** button to adjust the home position of the Pan, Tilt, Once the position has been selected, press the **ENTER** button to setup, to go back to the functions without any change press the **MENU** button again. Hold and press the **MENU** button about one second or wait for one minute to exit the menu mode.

4. How To Control The Unit

You can operate the unit in three ways:

1. Master/slave built-in preprogram function
2. Easy controller
3. Universal DMX controller

No need to turn the unit off when you change the DMX address, as new DMX address setting will be effect at once. Every time you turn the unit on, it will show “CM-108” on the display and move all the motors to their ‘home’ position and you may hear some noises for about 20 seconds. After that the unit will be ready to receive DMX signal or run the built in programs.

4.1 Master/Slave Built In Preprogrammed Function

By linking the units in master/slave connection, the first unit will control the other units to give an automatic, sound activated, synchronized light show. This function is good when you want an instant show. You have to set the first unit in master mode **Show Mode** and select **show 1** or **show 2** or **show 3** or **show 4** mode. Its DMX input jack will have nothing plugged into it, and Its master LED will be constantly on and sound LED will flash to the music. The other units will have to set in **slave mode** and select **Slave 1** (normal) or **Slave 2** (2 light show) mode, Their DMX cables plugged into the DMX input jacks (daisy chain) and the slave led lights will constantly on.

2-light show

In **slave mode**, **Slave 1** means the unit works normally and **Slave 2** means 2-light show. In order to create a great light show, you can set **Slave 2** on the second unit to get contrast movement to each other, even if you have two units only.

4.2 Easy Controller (By CA-8/CA-9 RTX)

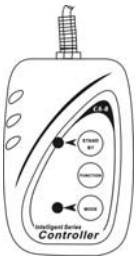

The easy remote control is used only in master/slave mode. By connecting to the 1/4” microphone jack (For CA-8) or 5-pin socket (For CA-9RTX) of the first unit, you will find that the remote controller on the first unit will control all the other units in Stand by, and Mode selection.

Stand By	Blackout the unit			
Function	1. Sync. Strobe 2. Async strobe 3. Sound Strobe	Show 1-4	1. Pan index 2. Tilt index 3. Dimmer	Fade Speed 1. Fast 2. Middle 3. Slow
Mode	Sound (LED OFF)	Show (LED Slow Blinking)	Show (LED Fast Blinking)	LED ON

4.3 DMX Controller

By using a universal DMX controller to control the units, you will need to set DMX address from 1 to 512 so that the units can receive DMX signal.

Press the **MENU** button up to when the **DMX Address** is showing on the display. Pressing **ENTER** button and the display will blink. Use **DOWN** and **UP** button to change the DMX512 address. Once the address has been selected, press the **ENTER** button to setup, to go back to the functions without any change press the **MENU** button again. Hold and press the **MENU** button about one second or wait for one minute to exit the menu mode. Please refer to the following diagram to address your DMX512 channel for the first 4 units：

Channel mode	Unit 1 Address	Unit 2 Address	Unit 3 Address	Unit 4 Address
9channels	1	10	19	28
12channels	1	13	25	37
16channels	1	17	33	49

4.4 DMX 512 Configuration

1 channel mode: (1 channel DMX mode revision, only effective from January 2013)

1Channel Mode
Ch1
Chase
248-255 Random Show 1-4
188-247 Show 4
128-187 Show 3
068-127 Show 2
008-067 Show 1
000-007 Blackout

Channel Mode:

Select **Channel mode**, press the **ENTER** button to confirm, the present mode will blink on the display. Use the **UP** and **DOWN** button to select 1 channel (mode1), 9 channels (mode2), 12 channels (mode3), 16 channels (mode4). Once the channel mode has been selected, press the **ENTER** button to setup, to go back to the functions without any change press the **MENU** button again. Hold and press the **MENU** button about one second or wait for one minute to exit the menu mode.

9 channel mode：

9 Channel Mode(1)

Ch1	Ch2	Ch3	Ch4	Ch5	Ch6	Ch7	Ch8	Ch9
Pan	Tilt	**Strobe**	**Red**	**Green**	**Blue**	**White**	Dimmer	**Function**
255 630° / 0 0°	255 240° / 0 0°	248-255 Open 240-247 Random Strobe 232-239 Open 190-231 Slow Close Fast Open 182-189 Open 140-181 Fast Close Slow Open 132-139 Open Fast 16-131 Slow 0-15 Open	255 100% / 0 0%	255 100% / 0 0%	255 100% / 0 0%	255 100% / 0 0%	255 100% / 0 0%	240-255 Stand alone 210-239 No Function 200-209 Reset All 090-199 No Function 080-089 Disable Blackout while Pan/Tilt Move 070-079 Enable Blackout while Pan/Tilt Move 000-069 No Function

12 channel mode：

Ch 1	***Electronic shutter effect***	
	000 - 019	Shutter closed
	020 - 049	Shutter open
	050 - 064	Strobe 1 (fast to slow)
	065 - 069	Shutter open
	070 - 084	Strobe 2: opening pulse (fast to slow)
	085 - 089	Shutter open
	090 - 104	Strobe 3: closing pulse (fast to slow)
	105 - 109	Shutter open
	110 - 124	Strobe 4: random strobe (fast to slow)
	125 - 129	Shutter open
	130 - 144	Strobe 5: random opening pulse (fast to slow)
	145 - 149	Shutter open
	150 - 164	Strobe 6: random closing pulse (fast to slow)
	165 - 169	Shutter open
	170 - 184	Strobe 7: burst pulse (fast to slow)
	185 - 189	Shutter open
	190 - 204	Strobe 8: random burst pulse (fast to slow)
	205 - 209	Shutter open
	210 - 224	Strobe 9: sine wave (fast to slow)
	225 - 229	Shutter open
	230 - 244	Strobe 10: burst (fast to slow)
	245 - 255	Shutter open

Ch 2	000 - 255	Dimmer (0% ~ 100%)
Ch 3	000 - 255	Pan(o° ~ 630°)
Ch 4	000 - 255	Pan Fine (Least significant bit)
Ch 5	000 - 255	Tilt(o° ~ 240°)
Ch 6	000 - 255	Tilt Fine (Least significant bit)

Ch 7	***Fixture control settings***	
	000 - 009	No function
	010 - 014	Reset entire fixture
	015 - 039	No function
	040 - 044	Pan and tilt speed = NORM
	045 - 049	Pan and tilt speed= FAST
	050 - 054	Pan and tilt speed = SLOW
	055 - 059	No function
	060 - 064	Fan mode FULL
	065 - 069	No function
	070 - 074	Fan mode REGULATED
	075 - 089	No function
	090 - 094	No function
	095 - 099	Enable Blackout while Pan tilt
	100 - 104	No function
	105 - 109	Disable Blackout while Pan tilt
	110 - 114	Fast dimming, speed of changes unrestricted
	115 - 119	No function
	120 - 124	Smooth dimming, speed of changes restricted slightly
	125 - 249	Illuminate display
	250 - 255	Stand alone

Ch 8	***Color wheel effect***	
	000-009	Open. RGB**W** color mixing (set colors manually with CH9+10+11+12)
	010-014	LEE 790 - Moroccan pink
	015 - 019	LEE 157 - Pink
	020 - 024	LEE 332 - Special rose pink
	025 - 029	LEE 328 - Follies pink
	030 - 034	LEE 345 - Fuchs ia pink
	035 - 039	LEE 194 - Surprise pink
	040 - 044	LEE 181 - Congo Blue
	045 - 049	LEE 071 - Tokyo Blue
	050 - 054	LEE 120 - Deep Blue
	055 - 059	LEE 079 - Just Blue
	060 - 064	LEE 132 - Medium Blue
	065 - 069	LEE 200 - Double CT Blue
	070 - 074	LEE 161 - Slate Blue
	075 - 079	LEE 201 - Full CT Blue
	080 - 084	LEE 202 - Half CT Blue
	085 - 089	LEE 117 - Steel Blue
	090 - 094	LEE 353 - Lighter Blue
	095 - 099	LEE 118 - Light Blue
	100 - 104	LEE 116 - Medium Blue Green
	105 - 109	LEE 124 - Dark Green
	110 - 114	LEE 139 - Primary Green
	115 - 119	LEE 089 - Moss Green
	120 - 124	LEE 122 - Fern Green
	125 - 129	LEE 738 - JAS Green
	130 - 134	LEE 088 - Lime Green
	135 - 139	LEE 100 - Spring Yellow
	140 - 144	LEE 104 - Deep Amber
	145 - 149	LEE 179 - Chrome Orange
	150 - 154	LEE 105 - Orange
	155 - 159	LEE 021 - Gold Amber
	160 - 164	LEE 778 - Millennium Gold
	165 - 169	LEE 135 - Deep Golden Amber
	170 - 174	LEE 164 - Flame Red
	175 - 179	Open
	Color wheel rotation effect	
	180 - 201	Clockwise, fast to slow
	202 - 207	Stop (this will stop wherever the color is at the time)
	208 - 229	Counter-clockwise, slow to fast
	230 - 234	Open
	Random color	
	235 - 239	Fast
	240 - 244	Medium
	245 - 249	Slow
	250 - 255	Open

Ch 9	000 - 255	Red (0% ~ 100%)
Ch 10	000 - 255	Green(0% ~ 100%)
Ch 11	000 - 255	Blue(0% ~ 100%)
Ch 12	000 - 255	White(0% ~ 100%)

16 channel mode：

16 Channel Mode(3)

Ch1	Ch2	Ch3	Ch4	Ch5	Ch6	Ch7	Ch8
Pan	Pan Fine	Tilt	Tilt Fine	Pan/Tilt Speed	Pan/Tilt Macro	Pan/Tilt Macro Speed	**Function**
255 630° / 0 0°	255 / 0	255 240° / 0 0°	255 / 0	255 Slow / 0 Fast	**236-255 Macro 12** **216-235 Macro 11** **196-215 Macro 10** **176-195 Macro 9** **156-175 Macro 8** **136-155 Macro 7** **116-135 Macro 6** **096-115 Macro 5** **076-095 Macro 4** **056-075 Macro 3** **036-055 Macro 2** **016-035 Macro 1** **000-015 No effect**	255 Slow / 0 Fast	240-255 Stand alone 210-239 No Function 200-209 Reset All 090-199 No Function 080-089 Disable Blackout while Pan/Tilt Move 070-079 Enable Blackout while Pan/Tilt Move 000-069 No Function

Ch9	Ch10	Ch11	Ch12	Ch13	Ch14	**Ch15**	**Ch16**
Dimmer	**Strobe**	**Red**	**Green**	**Blue**	**White**	**Color**	**Fade Speed**
255 100% / 0 0%	248-255 Open 240-247 Random Strobe 232-239 Open 190-231 Slow Close Fast Open 182-189 Open 140-181 Fast Close Slow Open 132-139 Open Fast 16-131 Slow 0-15 Open	255 100% / 0 0%	255 100% / 0 0%	255 100% / 0 0%	255 100% / 0 0%	**192-255** **Color Fade 1-16** **128-191** **Color Macro 1-16** **8-127** **Color 1-32** **0-7** **Normal**	255 Fast / 0 Slow

4.5 DMX512 Connection

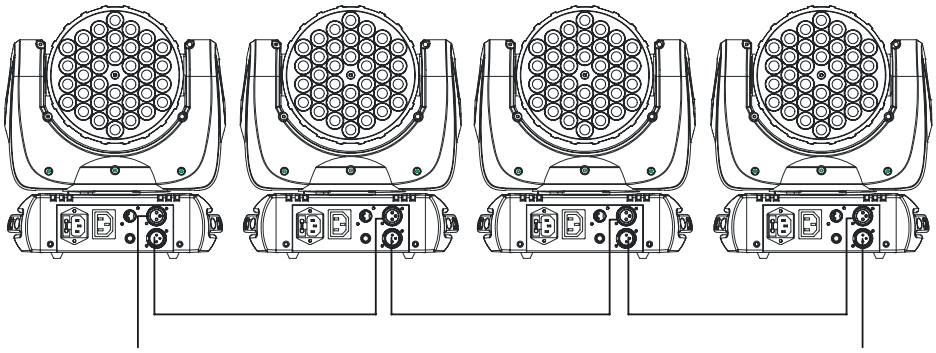

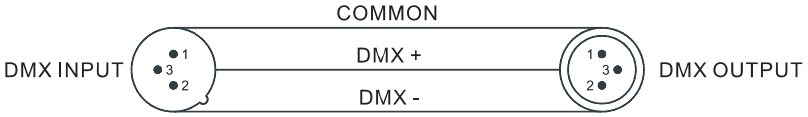

Termination reduces signal errors and avoids signal transmission problems and interference. It is always advisable to connect a DMX terminal.
(Resistance 120 ohm 1/4W)between pin2(DMX-)and pin3(DMX+) of the last fixture.

1. If you using a controller with 5 pins DMX output, you need to use a 5 to 3 pin adapter-cable.
2. At last unit, the DMX cable has to be terminated with a terminator. Solder a 120 ohm 1/4W resistor between pin 2(DMX-) and pin 3(DMX+) into a 3-pin XLR-plug and plug it in the DMX-output of the last unit.
3. Connect the unit together in a `daisy chain` by XLR plug from the output of the unit to the input of the next unit. The cable can not branched or split to a `Y` cable. DMX 512 is a very high-speed signal. Inadequate or damaged cables, soldered joints or corroded connectors can easily distort the signal and shut down the system.
4. The DMX output and input connectors are pass-through to maintain the DMX circuit, when one of the units' power is disconnected.
5. Each lighting unit needs to have an address set to receive the data sent by the controller. The address number is between 0-511 (usually 0 & 1 are equal to 1).
6. The end of the DMX 512 system should be terminated to reduce signal errors.
7. 3 pin XLR connectors are more popular than 5 pin XLR.

   3 pin XLR: Pin 1: GND, Pin 2: Negative signal (-), Pin 3: Positive signal (+)

   5 pin XLR: Pin 1: GND, Pin 2: Negative signal (-), Pin 3: Positive signal (+), Pin 4/Pin 5: Not used.

5. Troubleshooting

Following are a few common problems that may occur during operation. Here are some suggestions for easy troubleshooting:

A. The unit does not work, no light and the fan does not work

1. Check the connection of power and main fuse.
2. Measure the mains voltage on the main connector.
3. Check the power on LED.

B. Not responding to DMX controller

1. DMX LED should be on. If not, check DMX connectors, cables to see if link properly.
2. If the DMX LED is on and no response to the channel, check the address settings and DMX polarity.
3. If you have intermittent DMX signal problems, check the pins on connectors or on PCB of the unit or the previous one.
4. Try to use another DMX controller.
5. Check if the DMX cables run near or run alongside to high voltage cables that may cause damage or interference to DMX interface circuit.

C. Some units don’t respond to the easy controller

1. You may have a break in the DMX cabling. Check the LED for the response of the master/ slave mode signal.
2. Wrong DMX address in the unit. Set the proper address.

D. No response to the sound

1. Make sure the unit does not receive DMX signal.
2. Check microphone to see if it is good by tapping the microphone

E. One of the channels is not working well

1. The stepper motor might be damaged or the cable connected to the PCB is broken.
2. The motor's drive IC on the PCB might be out of condition

6. Fixture Cleaning

The cleaning of internal and external optical lenses and/or mirrors must be carried out periodically to optimize light output. Cleaning frequency depends on the environment in which the fixture operates: damp, smoky or particularly dirty surrounding can cause greater accumulation of dirt on the unit's optics.

- Clean with soft cloth using normal glass cleaning fluid.
- Always dry the parts carefully.
- Clean the external optics at least every 20 days. Clean the internal optics at least every 30/60 days.

EC Declaration of Conformity

We declare that our products (lighting equipments) comply with the following specification and bears CE mark in accordance with the provision of the Electromagnetic Compatibility (EMC) Directive 89/336/EEC.

EN55014-2: 1997 A1: 2001, EN61000-4-2: 1995; EN61000-4-3: 2002;
EN61000-4-4: 1995; EN61000-4-5: 1995, EN61000-4-6: 1996, EN61000-4-11: 1994.

&

Harmonized Standard

EN60598-1: 2000+ALL: 2000+A12: 2002
Safety of household and similar electrical appliances
Part 1: General requirements

Innovation, Quality, Performance