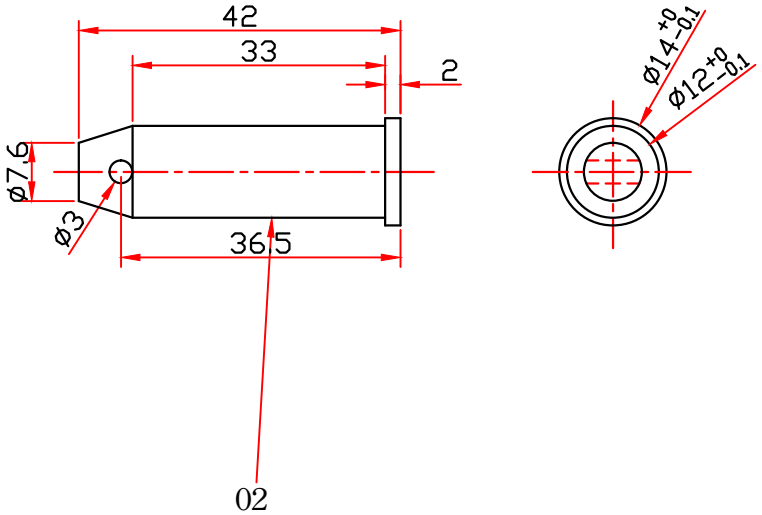

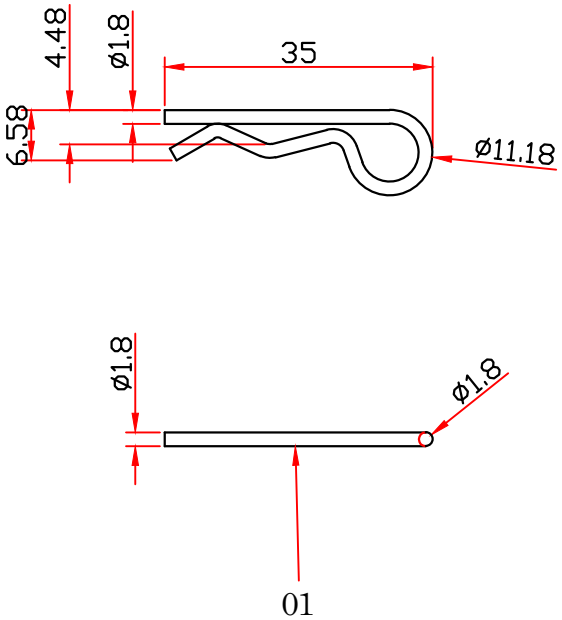

NO#	ITEM#	QTY
01	DMS-01-1C	1PCS
02	DMS-11-2	1PCS

DESIGNER	Kelly	2015.12.14			
TOLETANCE	VERIFIER	MATERIAL	FE	SCALE	1:1
<6 ±0.2	APPROVER	CUSTOMER NO.		UNITS	mm
>6-20 ±0.25					
>20-60 ±0.3		NAME			
>60 ±0.4		DRAWING NO.	ST-F23-PJ-SM	OFFICIAL EDITION	
ANGLE ±0.5°					