EQUINOX

Cabaret Colour HEX

User Manual

Order code: EQLED037B

WARNING

FOR YOUR OWN SAFETY, PLEASE READ THIS USER MANUAL CAREFULLY BEFORE YOUR INITIAL START-UP!

- Before your initial start-up, please make sure that there is no damage caused during transportation.
- Should there be any damage, consult your dealer and do not use the equipment.
- To maintain the equipment in good working condition and to ensure safe operation, it is necessary for the user to follow the safety instructions and warning notes written in this manual.
- Please note that damages caused by user modifications to this equipment are not subject to warranty.

CAUTION!
KEEP THIS EQUIPMENT AWAY FROM RAIN, MOISTURE AND LIQUIDS

CAUTION!
TAKE CARE USING THIS EQUIPMENT!
HIGH VOLTAGE-RISK OF ELECTRIC SHOCK!!

IMPORTANT:

The manufacturer will not accept liability for any resulting damages caused by the non-observance of this manual or any unauthorised modification to the equipment.

- Never let the power cable come into contact with other cables. Handle the power cable and all mains voltage connections with particular caution!
- Never remove warning or informative labels from the unit.
- Do not open the equipment and do not modify the unit.
- Do not connect this equipment to a dimmer pack.
- Do not switch the equipment on and off in short intervals, as this will reduce the system's life.
- Only use the equipment indoors.
- Do not expose to flammable sources, liquids or gases.
- Always disconnect the power from the mains when equipment is not in use or before cleaning! Only handle the power-cable by the plug. Never pull out the plug by pulling the power-cable.
- Make sure that the available mains supply voltage is between 100~240V AC, 50/60Hz.
- Make sure that the power cable is never crimped or damaged. Check the equipment and the power cable periodically.
- If the equipment is dropped or damaged, disconnect the mains power supply immediately and have a qualified engineer inspect the equipment before operating again.
- If the equipment has been exposed to drastic temperature fluctuation (e.g. after transportation), do not connect power or switch it on immediately. The arising condensation might damage the equipment. Leave the equipment switched off until it has reached room temperature.
- If your product fails to function correctly, stop use immediately. Pack the unit securely (preferably in the original packing material), and return it to your Pro Light dealer for service.
- Only use fuses of same type and rating.
- Repairs, servicing and power connection must only be carried out by a qualified technician. THIS UNIT CONTAINS NO USER SERVICEABLE PARTS.
- This lighting fixture is for professional use only - it is not designed for or suitable for household use. The product must be installed by a qualified technician in accordance with local territory regulations. The safety of the installation is the responsibility of the installer. The fixture presents risks of severe injury or death due to fire hazards, electric shock and falls.
- Warning! Risk Group 2 LED product according to EN 62471. Keep a distance of at least 11feet (3.3m) to avoid direct eye and skin exposure. Do not operate the fixture if the external cover protective lens is damaged or missing. Avoid direct viewing of the UV light and refrain from using optical instruments or any device that may concentrate the light/radiation output. We advise users to take necessary precautions to minimise direct exposure to UV radiation and individuals suffering from a range of eye conditions, sunlight exposure disorders, or individuals using photosensitive medication, may receive discomfort if exposed to the ultraviolet (UV) light emitted from this fixture.
- WARRANTY: One year from date of purchase.

OPERATING DETERMINATIONS

If this equipment is operated in any other way, than those described in this manual, the product may suffer damage and the warranty becomes void. Incorrect operation may lead to danger e.g: short-circuit, burns and electric shocks etc.

Do not endanger your own safety and the safety of others!

Incorrect installation or use can cause serious damage to people and/or property.

Cabaret Colour HEX

The Cabaret Colour HEX has been designed for entertainers on the go. The 36 six-colour LEDs are housed in an ultra slim and lightweight housing with an adjustable bracket which can be used for hanging, stand mount and floor applications. A 40° beam angle easily covers wide areas with intense colours whilst the adjustable barn doors help direct and focus the light. On board control options include auto, sound active and DMX.

- 36 x 8W six-colour LEDs (RGBWAUV)
- Beam angle: 40°
- 7,428 Lux @ 2m
- Refresh rate: 11kHz
- DMX channels: 3/3/6/8 or 11 selectable
- Static colour, colour mix, colour change, colour fade, sound active and master/slave modes plus built-in programs
- 0 - 100% dimming
- Variable strobe
- Bracket allows for multiple rigging or floor standing applications
- 4 button menu with LED display
- powerCON input
- 3-Pin XLR input/output
- Fan cooled
- Barn doors included

40° - Lux					
FULL ON	29712	7428	3302	1857	118
R	6284	1571	698	393	251
G	9012	2253	1002	563	361
B	1460	365	162	91	58
W	12680	3170	1409	793	507
A	3460	865	385	216	138
UV	N/A	N/A	N/A	N/A	N/A

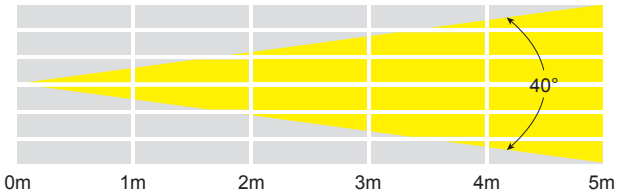

Specifications	
Power consumption	291W
Power supply	100~240V, 50/60Hz
Fuse	F5A 250V
Dimensions	326 x 449 x 104mm
Weight	6kg
Order code	EQLED037B

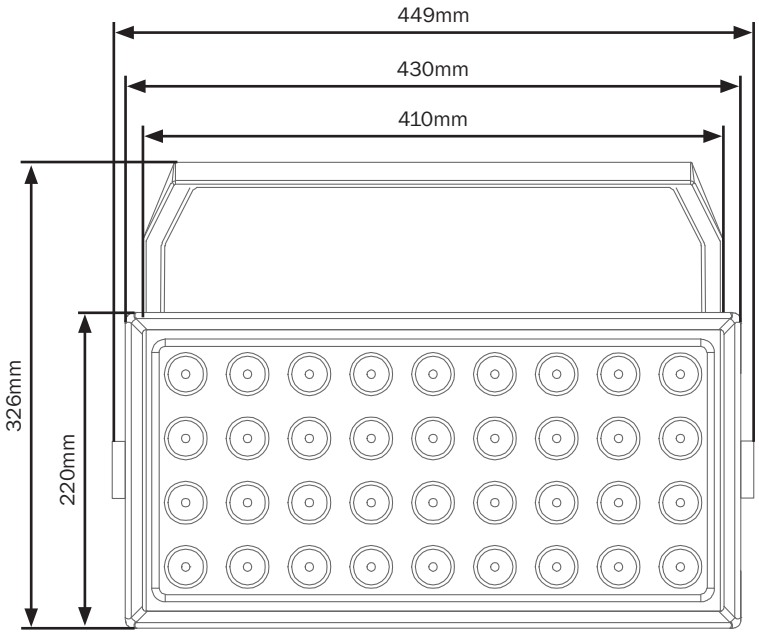

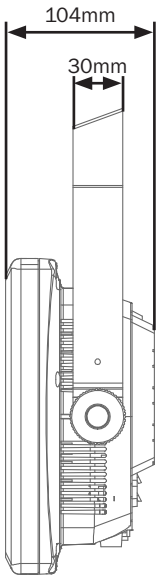

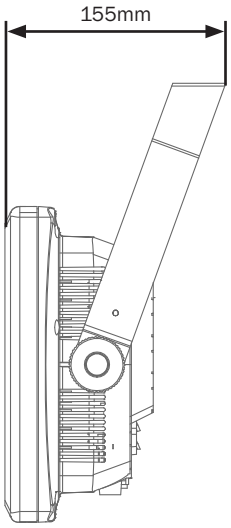

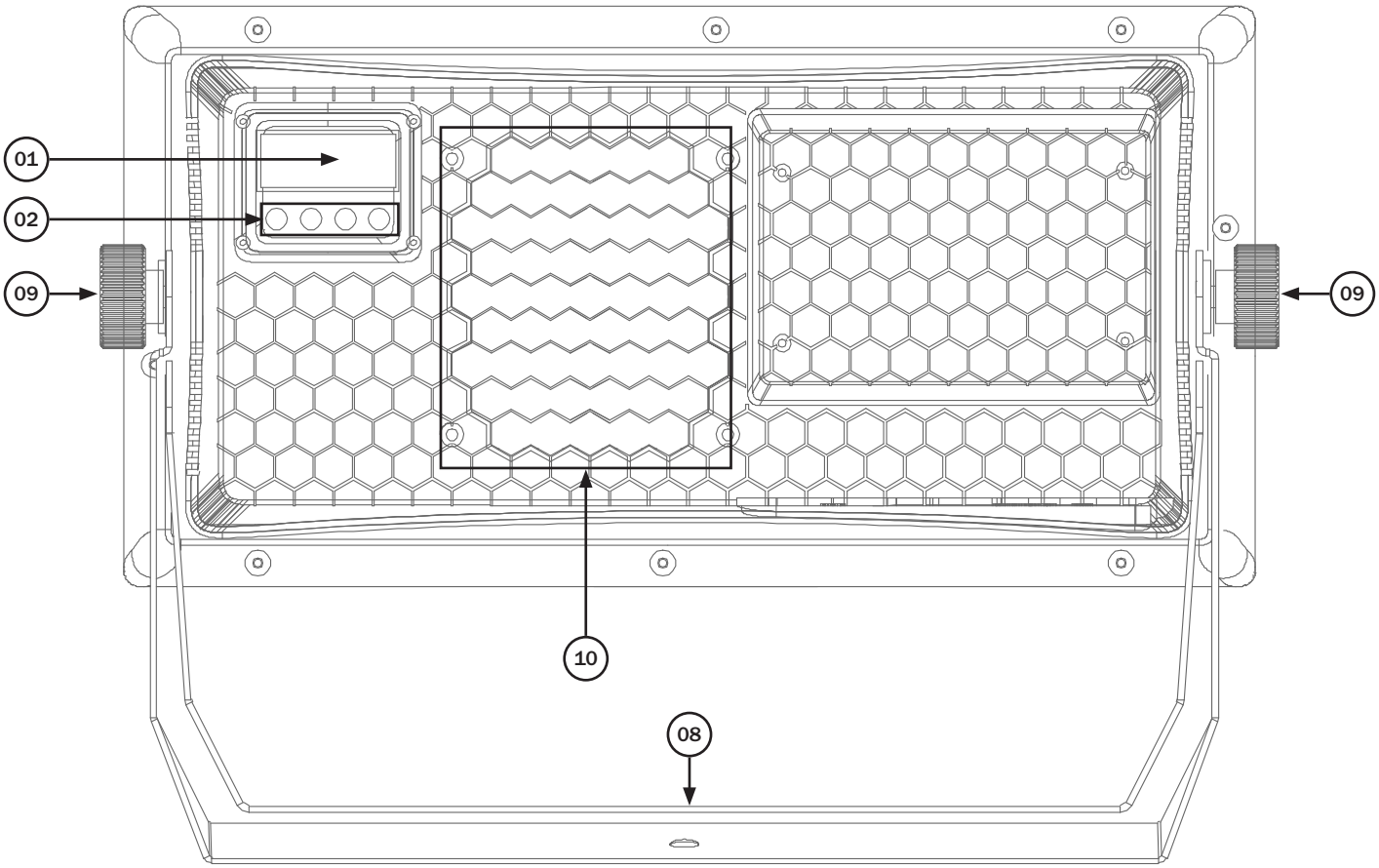

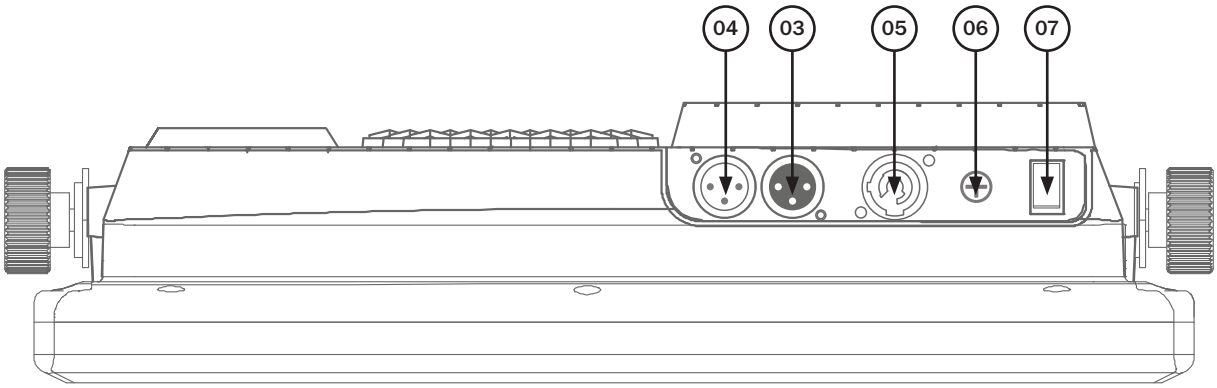

01 - LED display
02 - Function buttons
03 - 3-Pin DMX input
04 - 3-Pin DMX output
05 - powerCON input
06 - Fuse F5A 250V
07 - On/off switch
08 - Mounting bracket
09 - Mounting bracket adjustment knobs
10 - Fan cooling vents

In the box: **1 x fixture, & 1 x power cable**

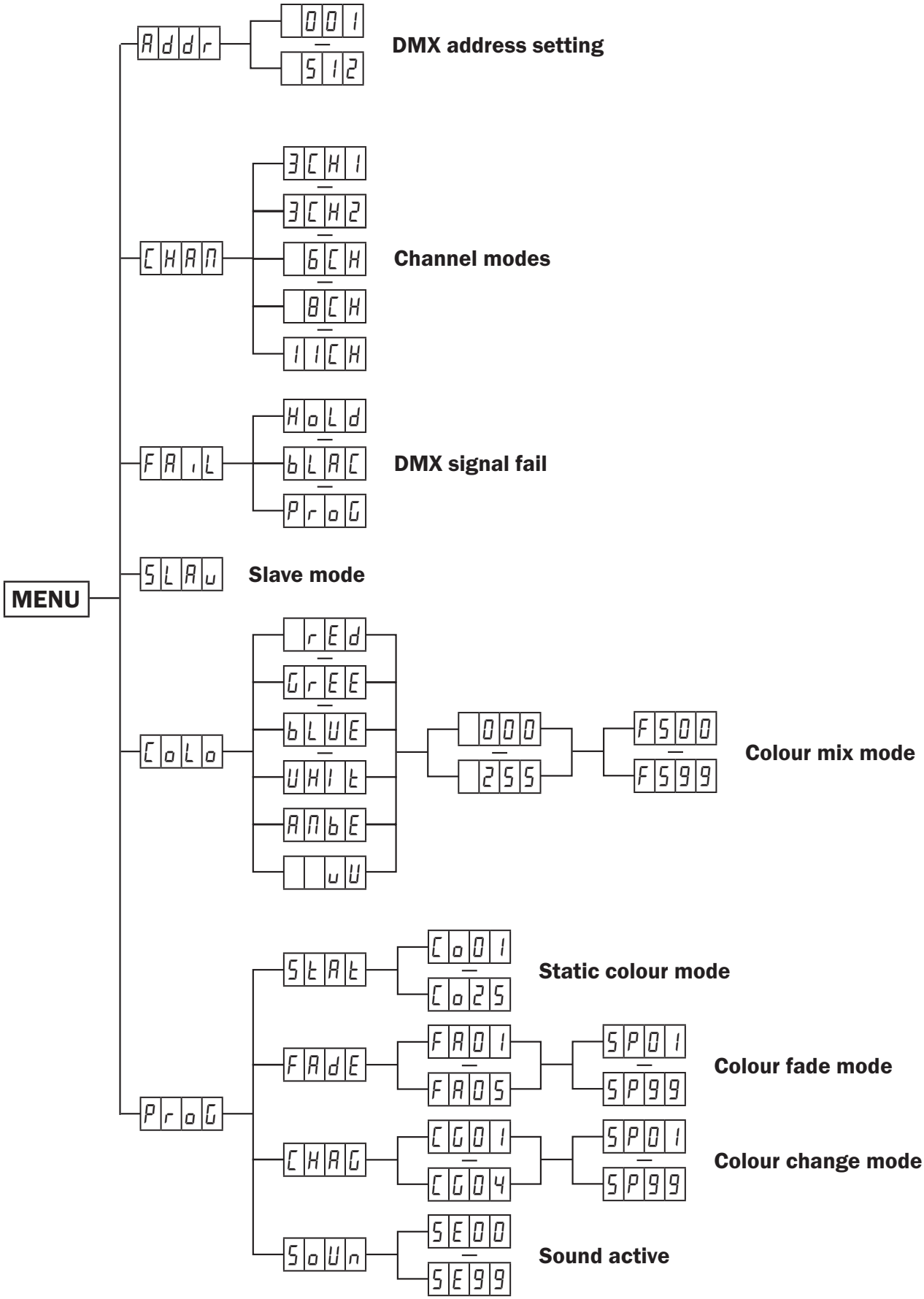
MENU
Addr
001
512
DMX address setting
CHAN
3CH1
3CH2
6CH
8CH
11CH
Channel modes
FAIL
HoLd
bLAC
PrOG
DMX signal fail
SLAU
Slave mode
COLO
rEd
GrEE
bLUE
UHIt
AMbE
uU
000
255
F500
F599
Colour mix mode
PrOG
StAt
Co01
Co25
Static colour mode
FAdE
FA01
FA05
SP01
SP99
Colour fade mode
CHAG
CG01
CG04
SP01
SP99
Colour change mode
SoUn
SE00
SE99
Sound active

DMX mode:

Operating in a DMX control mode environment gives the user the greatest flexibility when it comes to customising or creating a show. In this mode you will be able to control each individual trait of the fixture and each fixture independently.

To access the DMX address mode, press the "**MENU**" button and use the "**UP**" and "**DOWN**" buttons to show Addr on the LED display. Now press the "**ENTER**" button and use the "**UP**" and "**DOWN**" buttons to set the required DMX address. Press the "**ENTER**" button to confirm the setting. To exit out of any of the above options, press the "**MENU**" button.

DMX channel mode:

To access the DMX channel mode, press the "**MENU**" button and use the "**UP**" and "**DOWN**" buttons to show CHMd on the LED display. Now press the "**ENTER**" button and use the "**UP**" and "**DOWN**" buttons to choose one of the 3/3/6/8 or 11 DMX channel modes. Press the "**ENTER**" button to confirm the setting. To exit out of any of the above options, press the "**MENU**" button.

3 channel mode 1:

Channel	Value	Function
1	000-005	No function
	006-015	Red
	016-025	Green
	026-035	Blue
	036-045	Lime Green
	046-055	Yellow Green
	056-065	Yellow
	066-075	Orange Yellow
	076-085	Amber
	086-095	Orange
	096-105	Fuschia Pink
	106-115	Magenta
	116-125	Pink
	126-135	Purple
	136-145	Medium Blue
	146-155	Cyan
	156-165	Light Blue
	166-175	Sky Blue
	176-185	Turquoise
	186-195	Mint Green
	196-205	White (Blue tint)
	206-215	White
	216-225	Cool White
	226-235	White (Pink tint)

Channel	Value	Function
1. cont	236-245	White (Yellow tint)
	246-255	Warm White
2	000-005	No function
	006-030	3 colour fade (RGB)
	031-055	3 colour fade (CMY)
	056-080	4 colour fade (RGBW)
	081-105	7 colour fade (RGBWCMY)
	106-130	3 colour fade in/out (RGB)
	131-155	3 colour change (RGB)
	156-180	3 colour change (CMY)
	181-205	4 colour change (RGBW)
	206-230	7 colour change (RGBWCMY)
	231-255	Sound active
3	000-255	Program speed (slow-fast)/ Sensitivity (low-high)

3 channel mode 2:

Channel	Value	Function
1	000-255	Red dimmer (0-100%)
2	000-255	Green dimmer (0-100%)
3	000-255	Blue dimmer (0-100%)

6 channel mode:

Channel	Value	Function
1	000-255	Red dimmer (0-100%)
2	000-255	Green dimmer (0-100%)
3	000-255	Blue dimmer (0-100%)
4	000-255	White dimmer (0-100%)
5	000-255	Amber dimmer (0-100%)
6	000-255	UV dimmer (0-100%)

8 channel mode:

Channel	Value	Function
1	000-255	Red dimmer (0-100%)
2	000-255	Green dimmer (0-100%)
3	000-255	Blue dimmer (0-100%)
4	000-255	White dimmer (0-100%)
5	000-255	Amber dimmer (0-100%)
6	000-255	UV dimmer (0-100%)
7	000-255	Master dimmer (0-100%)
8	000-010	No function
	011-255	Strobe (slow-fast)

11 channel mode:

Channel	Value	Function
1	000-255	Red dimmer (0-100%)
2	000-255	Green dimmer (0-100%)
3	000-255	Blue dimmer (0-100%)
4	000-255	White dimmer (0-100%)
5	000-255	Amber dimmer (0-100%)
6	000-255	UV dimmer (0-100%)
7	000-255	Master dimmer (0-100%)
8	000-010	No function
	011-255	Strobe (slow-fast)
9	000-005	No function
	006-015	Red
	016-025	Green
	026-035	Blue
	036-045	Lime Green
	046-055	Yellow Green
	056-065	Yellow
	066-075	Orange Yellow
	076-085	Amber
	086-095	Orange
	096-105	Fuschia Pink
	106-115	Magenta
	116-125	Pink
	126-135	Purple
	136-145	Medium Blue

Channel	Value	Function
9 cont.	146-155	Cyan
	156-165	Light Blue
	166-175	Sky Blue
	176-185	Turquoise
	186-195	Mint Green
	196-205	White (Blue tint)
	206-215	White
	216-225	Cool White
	226-235	White (Pink tint)
	236-245	White (Yellow tint)
	246-255	Warm White
10	000-005	No function
	006-030	3 colour fade (RGB)
	031-055	3 colour fade (CMY)
	056-080	4 colour fade (RGBW)
	081-105	7 colour fade (RGBWCMY)
	106-130	3 colour fade in/out (RGB)
	131-155	3 colour change (RGB)
	156-180	3 colour change (CMY)
	181-205	4 colour change (RGBW)
	206-230	7 colour change (RGBWCMY)
	231-255	Sound active
11	000-255	Program speed (slow-fast)/Sensitivity (low-high)

Master/slave mode:

The default setting for this fixture is Master.

To set the unit as a slave, press the "**MENU**" button on the front of the master unit to show SLAu on the LED display. The unit is now in Slave mode.

To exit out of any of the above options, press the "**MENU**" button.

Please ensure that all slave units are set to the same DMX channel mode as the master unit.

DMX Signal Fail:

To access the DMX signal fail setting, press the "**MENU**" button and use the "**UP**" and "**DOWN**" buttons to show FAiL on the LED display. Now press the "**ENTER**" button and use the "**UP**" and "**DOWN**" buttons to choose between HoLd (Hold), bLAC (Blackout) or ProG (Program mode).
Press the "**ENTER**" button to confirm the setting.
To exit out of any of the above options, press the "**MENU**" button.

Colour mix mode:

To access the colour mix mode, press the "**MENU**" button to show CoLo on the LED display.
Now press the "**ENTER**" button and use the "**UP**" and "**DOWN**" buttons to choose rEd.
Press the "**ENTER**" button and use the "**UP**" and "**DOWN**" buttons to select the brightness of Red between 000 ~ 255. **Value: 000 - 255 (000 = LEDs off, 255 = high).**
Now press the "**MENU**" button and repeat for GrEE Green, bLUE Blue, UHIt White, AMbE Amber and uU UV.
Press the "**ENTER**" button and use the "**UP**" and "**DOWN**" buttons to select the strobe speed between F500 ~ F599. **Value: 00 - 99 (00 = strobe off, 99 = fast).**
Press the "**ENTER**" button to confirm the setting.
To exit out of any of the above options, press the "**MENU**" button.

Built-in programs:

To access the built-in programs, press the "**MENU**" button to show ProG on the LED display.
Now press the "**ENTER**" button and use the "**UP**" and "**DOWN**" buttons to select one of the 5 built-in programs (static colour, colour fade, auto, sound or strobe).

StAt - Press the "**ENTER**" button and use the "**UP**" and "**DOWN**" buttons to select between Co01 ~ Co25. Press the "**ENTER**" button to confirm the setting.

Co01 - Red
Co02 - Green
Co03 - Blue
Co04 - Lime Green
Co05 - Yellow Green
Co06 - Yellow
Co07 - Orange Yellow
Co08 - Amber
Co09 - Orange
Co10 - Fuschia Pink
Co11 - Magenta
Co12 - Pink
Co13 - Purple
Co14 - Medium Blue
Co15 - Cyan
Co16 - Light Blue
Co17 - Sky Blue
Co18 - Turquoise
Co19 - Mint Green
Co20 - White (Blue tint)
Co21 - White
Co22 - Cool White
Co23 - White (Pink tint)
Co24 - White (Yellow tint)
Co25 - Warm White

Built-in programs (cont.):

FAdE - Press the "**ENTER**" button and use the "**UP**" and "**DOWN**" buttons to select the fade program between FA01 ~ FA05. Press the "**ENTER**" button and use the "**UP**" and "**DOWN**" buttons to select the fade speed between SP01 ~ SP09. Press the "**ENTER**" button to confirm the setting.
(01 = slow speed, 09 = fast speed).

CHAG - Press the "**ENTER**" button and use the "**UP**" and "**DOWN**" buttons to select the auto speed between CG01 ~ CG04. Press the "**ENTER**" button to confirm the setting.
(01 = slow speed, 09 = fast speed).

SoUn - Press the "**ENTER**" button and use the "**UP**" and "**DOWN**" buttons to select the sound sensitivity between SE00 ~ SE99. Press the "**ENTER**" button to confirm the setting.
(00 = low sensitivity, 09 = high sensitivity).

Setting the DMX address:

The DMX mode enables the use of a universal DMX controller. Each fixture requires a “start address” from 1- 512. A fixture requiring one or more channels for control begins to read the data on the channel indicated by the start address. For example, a fixture that occupies or uses 7 channels of DMX and was addressed to start on DMX channel 100, would read data from channels: 100, 101, 102, 103, 104, 105 and 106. Choose a start address so that the channels used do not overlap. E.g. the next unit in the chain starts at 107.

DMX 512:

DMX (Digital Multiplex) is a universal protocol used as a form of communication between intelligent fixtures and controllers. A DMX controller sends DMX data instructions form the controller to the fixture. DMX data is sent as serial data that travels from fixture to fixture via the DATA “IN” and DATA “OUT” XLR terminals located on all DMX fixtures (most controllers only have a data “out” terminal).

DMX linking:

DMX is a language allowing all makes and models of different manufactures to be linked together and operate from a single controller, as long as all fixtures and the controller are DMX compliant. To ensure proper DMX data transmission, when using several DMX fixtures try to use the shortest cable path possible. The order in which fixtures are connected in a DMX line does not influence the DMX addressing. For example; a fixture assigned to a DMX address of 1 may be placed anywhere in a DMX line, at the beginning, at the end, or anywhere in the middle. When a fixture is assigned a DMX address of 1, the DMX controller knows to send DATA assigned to address 1 to that unit, no matter where it is located in the DMX chain.

DATA cable (DMX cable) requirements (for DMX operation):

This fixture can be controlled via DMX-512 protocol. The DMX address is set on the back of the unit. Your unit requires either a standard 3-pin or 5-pin XLR connector for data input/output, see images below.

Further DMX cables can be purchased from all good sound and lighting suppliers or Prolight Concepts dealers.				
Please quote:	3-Pin:	**CABL10 – 2m**	**CABL11 – 5m**	**CABL12 – 10m**
	5-Pin:	**CABL185 – 2m**	**CABL187 – 5m**	**CABL188 – 10m**

Also remember that DMX cable must be daisy chained and cannot be split.

Notice:

Be sure to follow the diagrams below when making your own cables. Do not connect the cables shield conductor to the ground lug or allow the shield conductor to come in contact with the XLRs outer casing. Grounding the shield could cause a short circuit and erratic behaviour.

Pin Configuration	
3-Pin	5-Pin
Pin 1 - Ground	
Pin 2 - Negative	
Pin 3 - Positive	
–	Pin 4 - N/C
–	Pin 5 - N/C

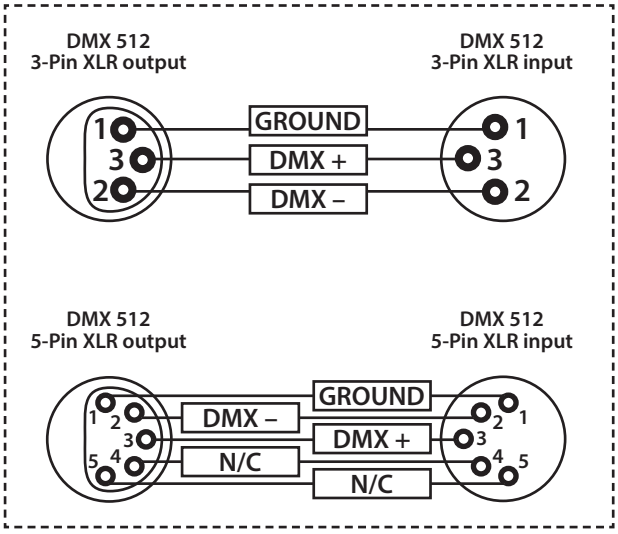

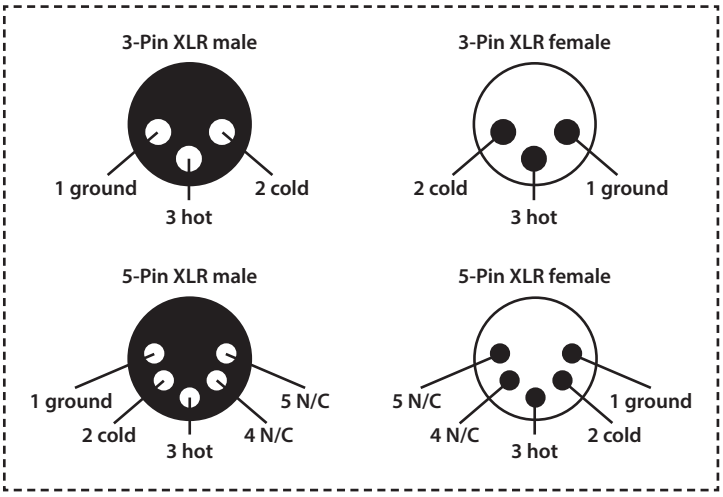

Line termination:

When longer runs of cable are used, you may need to use a terminator on the last unit to avoid erratic behaviour.

Using a cable terminator will decrease the possibilities of erratic behaviour. (3-pin - Order ref: CABL90, 5-pin - Order ref: CABL89)

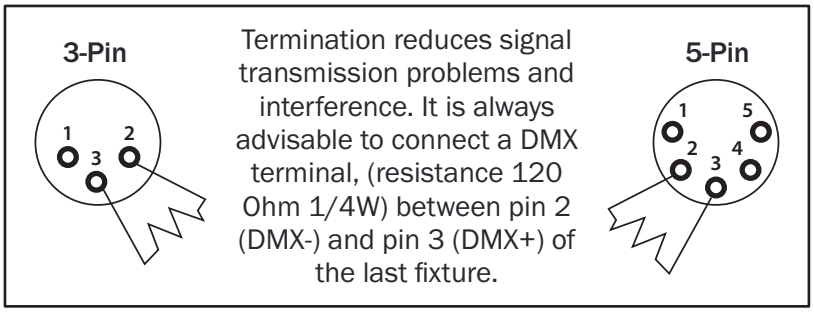

Termination reduces signal transmission problems and interference. It is always advisable to connect a DMX terminal, (resistance 120 Ohm 1/4W) between pin 2 (DMX-) and pin 3 (DMX+) of the last fixture.

5-pin XLR DMX connectors:

Some manufactures use 5-pin XLR connectors for data transmission in place of 3-pin. 5-pin XLR fixtures may be implemented in a 3-pin XLR DMX line. When inserting standard 5-pin XLR connectors in to a 3-pin line a cable adaptor must be used. The diagram below details the correct cable conversion.

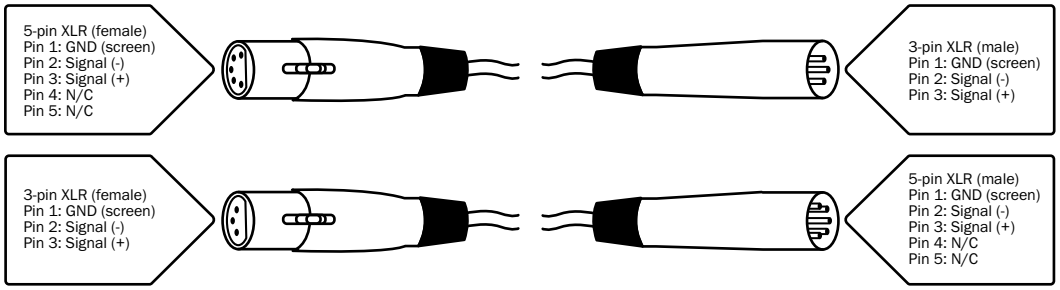

Correct Disposal of this Product (Waste Electrical & Electronic Equipment)

(Applicable in the European Union and other European countries with separate collection systems)

This marking shown on the product or its literature, indicates that it should not be disposed of with other household wastes at the end of its working life. To prevent possible harm to the environment or human health from uncontrolled waste disposal, please separate this from other types of wastes and recycle it responsibly to promote the sustainable reuse of material resources.

Household users should contact either the retailer where they purchased this product, or their local government office, for details of where and how they can take this item for environmentally safe recycling.

Business users should contact their supplier and check the terms and conditions of the purchase contract. This product should not be mixed with other commercial wastes for disposal.