Antenna Distribution System

User Manual

Order codes:

MIC130 - ADS4 UHF Antenna Distributor

MIC131 - RPA2 UHF Remote Paddle Antenna

WARNING

FOR YOUR OWN SAFETY, PLEASE READ THIS USER MANUAL CAREFULLY BEFORE YOUR INITIAL START-UP!

- Immediately upon receiving this product, carefully unpack the carton and check the contents to ensure that all the parts are present.
- Before initial start-up, please make sure that there is no damage caused during transportation.
- Should there be any damage, consult your dealer and do not use the equipment.
- Retain the carton and all packaging materials.
- In the event that the equipment must be returned to the supplier, it is important that the equipment is returned in the original carton and packaging.
- To maintain the equipment in good working condition and to ensure safe operation, it is necessary for the user to follow the safety instructions and warning notes written in this manual.
- Please note that damages caused by user modifications to this equipment are not subject to warranty.

CAUTION!
KEEP THIS EQUIPMENT AWAY FROM MOISTURE, RAIN AND LIQUIDS, AND OUT OF DAMP/HUMID ENVIRONMENTS

CAUTION!
TAKE CARE USING THIS EQUIPMENT!
HIGH VOLTAGE-RISK OF ELECTRIC SHOCK!!

IMPORTANT:

The manufacturer will not accept liability for any resulting damages caused by the non-observance of this manual or any unauthorised modification to the equipment.

- Never let the power cable come into contact with other cables. Handle the power cable and all mains voltage connections with caution!
- Never remove warning or informative labels from the equipment.
- Do not open or modify the equipment.
- Do not connect this equipment to a dimmer-pack.
- Do not switch the equipment on and off in short intervals, as this will reduce the system's life.
- Only use the equipment indoors.
- Do not expose to flammable sources, liquids or gases.
- Always disconnect the power from the mains when equipment is not in use or before cleaning! Only handle the power cable by the plug. Never pull out the plug by pulling the power cable.
- Make sure that the available voltage is 12V DC (240V AC~50Hz power supply included).
- Make sure that the power cable is never crimped or damaged. Check the equipment and the power cable periodically.
- If the equipment is dropped or damaged, disconnect the mains power supply immediately. Have a qualified engineer inspect the equipment before operating again.
- If the equipment has been exposed to drastic temperature fluctuation (e.g. after transportation), do not switch it on immediately. The arising condensation might damage the equipment. Leave the equipment switched off until it has reached room temperature.
- If the product fails to function correctly, discontinue use immediately. Pack securely (preferably in the original packing material), and return to your dealer for service.
- Only use fuses of same type and rating.
- Repairs, servicing and power connection must only be carried out by a qualified technician. THIS UNIT CONTAINS NO USER SERVICEABLE PARTS.
- WARRANTY: One year from date of purchase.

OPERATING DETERMINATIONS

If this equipment is operated in any other way, than those described in this manual, the product may suffer damage and the warranty becomes void. Incorrect operation may lead to danger e.g: short-circuit, burns and electric shocks etc.

In case of malfunction this unit should be returned for service or inspection.

Do not endanger your own safety and the safety of others!

Incorrect installation or use can cause serious damage to people and/or property.

Antenna Distribution System

A UHF wideband antenna splitter suitable for use with up to four radio microphone receivers. Dual 1:4 configuration for use with up to four diversity receivers allows the use of two W Audio RPA2 active antenna across multiple receivers, reducing intermodulation and resultant RF signal dropout. The antenna features a 5/8” female thread suitable for mounting onto microphone stands allowing optimum positioning for maximum RF reception.

ADS4 UHF Antenna Distributor

- Loop thru function to allow system expansion
- Dual 1:4 configuration
- DC power distribution
- BNC antenna connections
- 9V DC bias (100mA) output for use with active antenna
- On/off switch with LED power indication
- Supplied with 13A UK PSU (12V DC, 5A), ten 0.5m BNC cables and two 5.0m BNC cables

Specifications	ADS4
Power supply	DC 12-18V, 5A (adaptor supplied)
Dimensions	50 x 480 x 240mm
Weight	2.3kg
Order code	MIC130

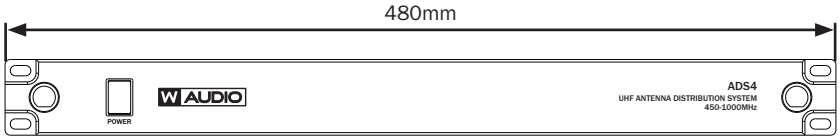

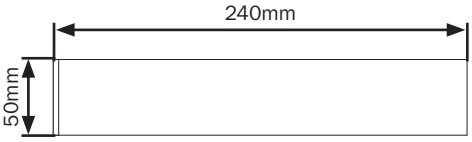

RPA2 UHF Remote Paddle Antenna

- Integral 15dB booster
- 4~6dBi directional gain
- Wide band 400-1000Mhz operating frequency range
- 5/8” female thread for stand mounting
- LED power indicator

Specifications	RPA2
Power supply	8-12V DC bias via BNC
Dimensions	330 x 310 x 30mm
Weight	0.5kg
Order code	MIC131

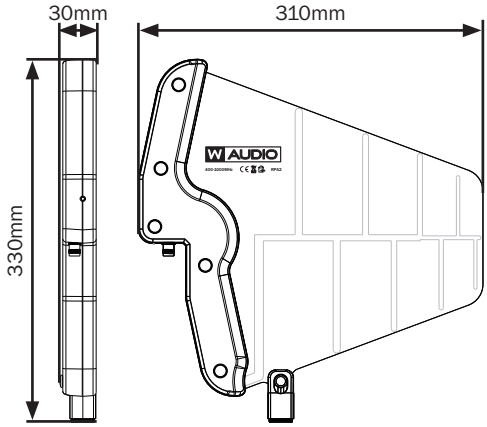

ADS4 UHF Antenna Distributor

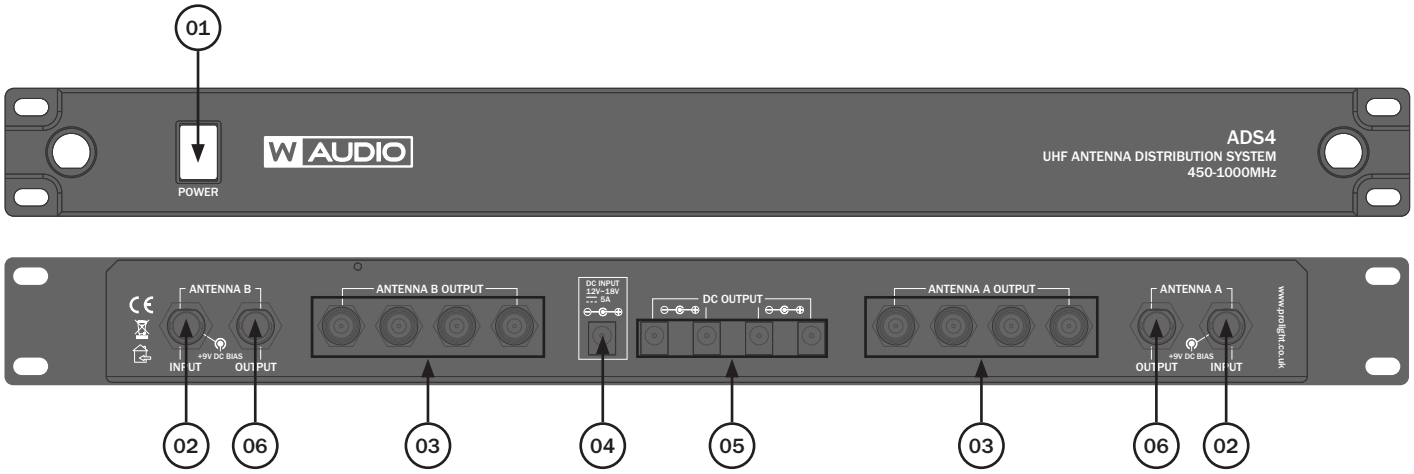

01 - Power ON/OFF switch - When the distributor is connected to the appropriate power source, and the switch in the ON position, the LED within the switch will illuminate.

02 - Antenna A/B input connectors - BNC sockets For the connection of two WAudio RPA UHF antenna paddles. Each output provides a bias of 9V 100mA (centre +ve).

03 - RF outputs - RF outputs via BNC sockets for connection to the radio microphone receivers.

04 - DC power input - The ADS4 requires a regulated, 12-18V 5A DC power supply. Polarity should be centre +ve.

05 - DC power outputs - 12-18V DC power outputs for supplying up to four radio microphone receivers, each up to 500mA. The DC voltage is a direct output from the DC power input. Please note – the ADS4 DC outputs are not regulated internally by the ADS4, the DC Outputs are direct wired in parallel to the DC input and will output at the same voltage as the input.

06 - RF link - RF outputs via BNC sockets for connection to the radio microphone receivers or additional ADS4 distribution units.

RPA2 UHF Remote Paddle Antenna

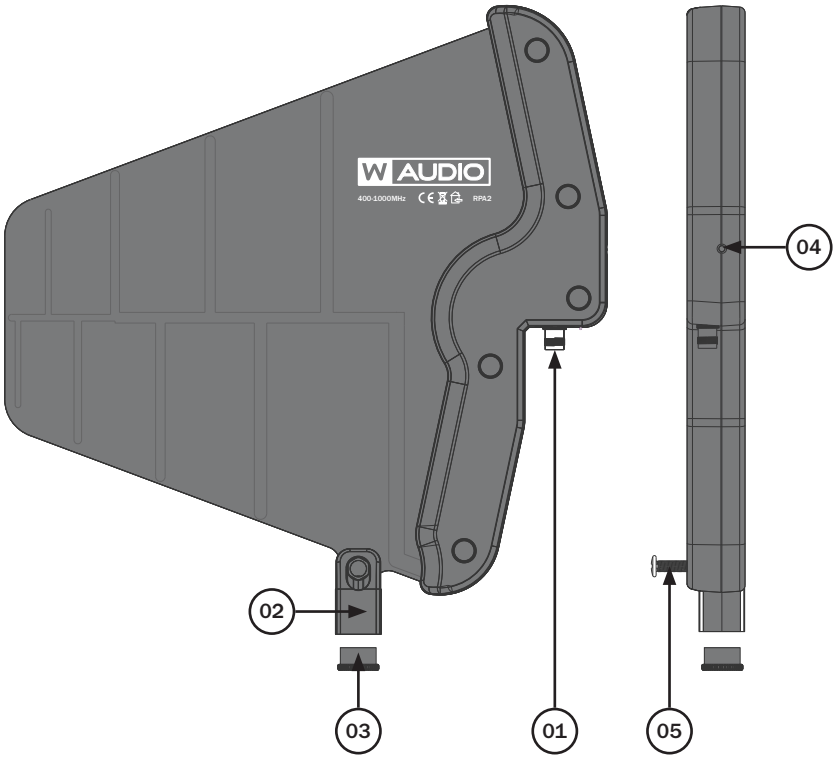

01 - BNC RF output connector - For the connection of a high quality 50Ω RF cable 5-20m in length.

02 - Swivel bracket - The bracket features a 5/8” female screw thread for connection to industry standard microphone stands. The bracket maybe tilted to offer optimal positioning.

03 - Stand thread adaptor - Supplied to allow the integral swivel bracket to be adapted down from 5/8” female to 3/8” female screw thread.

04 - Power Indicator LED - When the bias voltage supplied to the RPA2 is between 8-12V DC the power indicator LED will illuminate to confirm the internal booster is active.

05 - Bracket tightening screw - The screw maybe tightened to prevent movement. Tighten the screw in a clockwise direction using a standard screwdriver.

Fig A. Illustration to show the linking of radio microphone receivers to the antenna distribution unit.

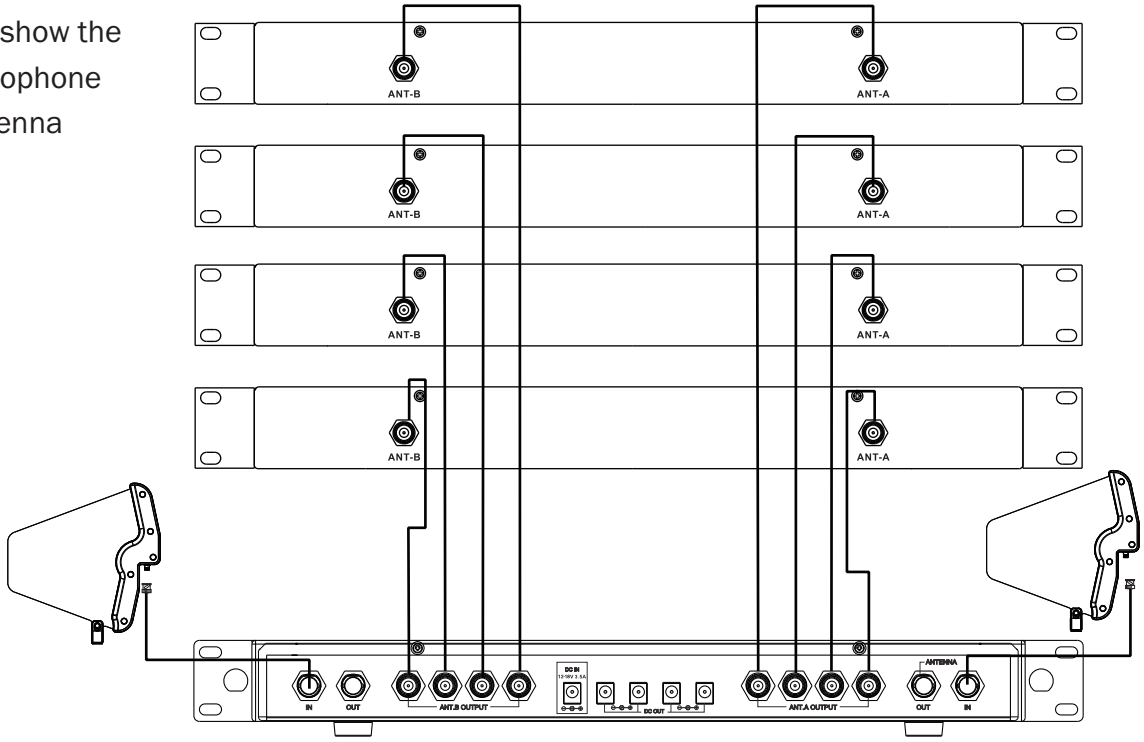

Fig B. Illustration to show the linking of multiple antenna distribution units.

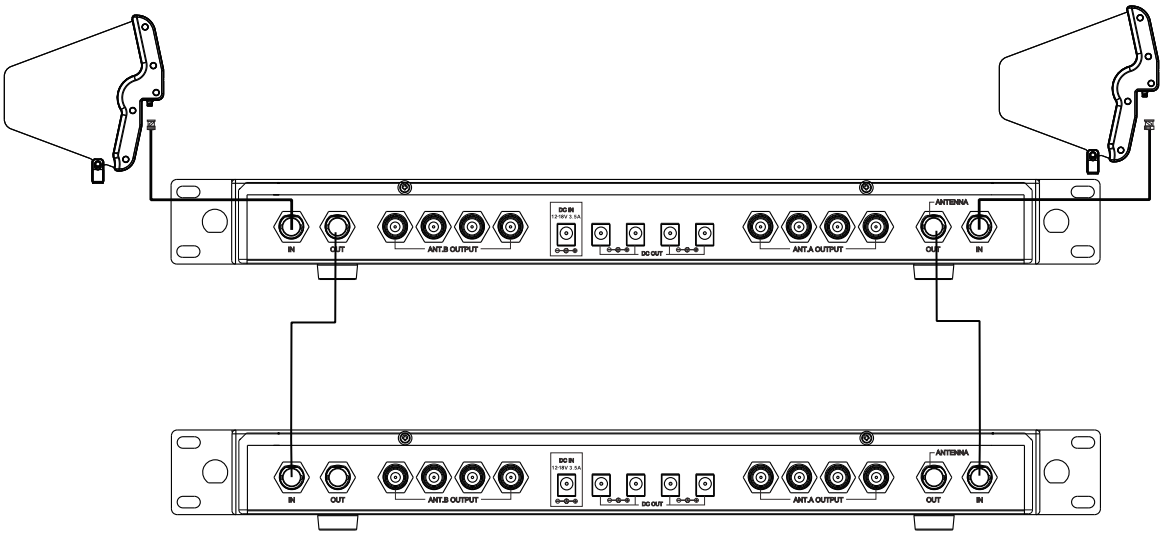

After installing the radio microphone receivers and ADS4 into a secure rack enclosure, using the short patch cables supplied, link the receivers individually taking care to avoid any cross wires between A and B channels. Additional ADS4 units maybe cascaded from the ANTENNA OUT link connectors.

Connect the RPA2 UHF remote panel antennae to the ANTENNA A and ANTENNA B outputs using either the supplied 5m RF cables, or high quality 50Ω RF cables of up to 20m in length. All RF cables should be kept as short as possible in cable length to minimise any losses in the system.

Connect the DC link cables from the ADS4 to the receivers individually taking care to ensure all receivers are of 12V-18 DC centre +ve power type.

Connect the DC power supply to the DC IN socket and switch on the power.

The power indicators on the front panel of the ADS4 and on the spine of the RPA2 will illuminate to indicate the units are powered on.

Fix the RPA2 antennae onto microphone stands close by the stage area ensuring the stand or cables will not prevent any trip hazards.

Orientate the antennae in the direction of the stage as shown in the diagram.

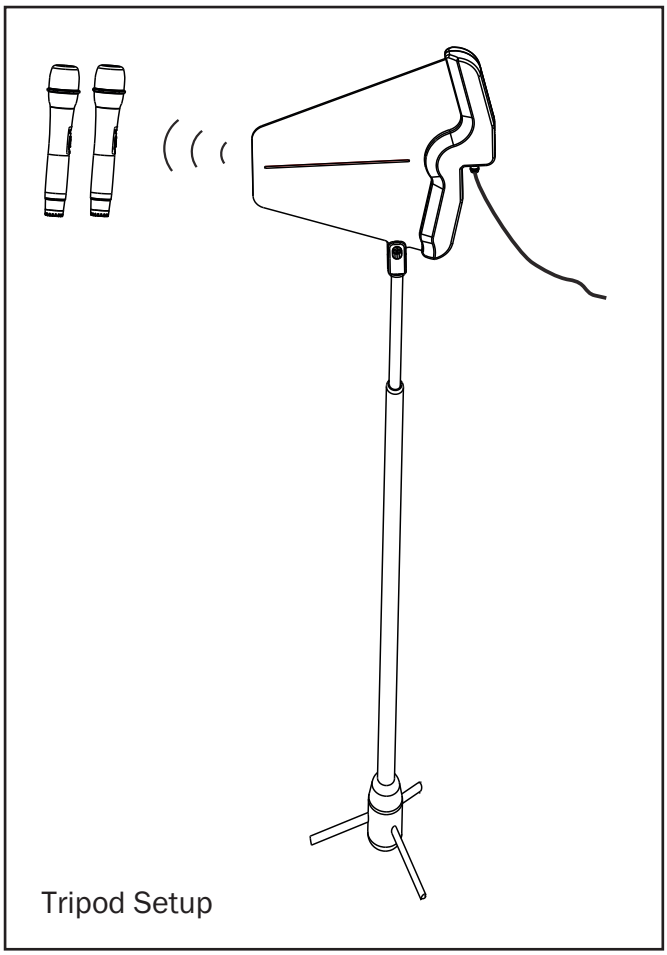
Tripod Setup

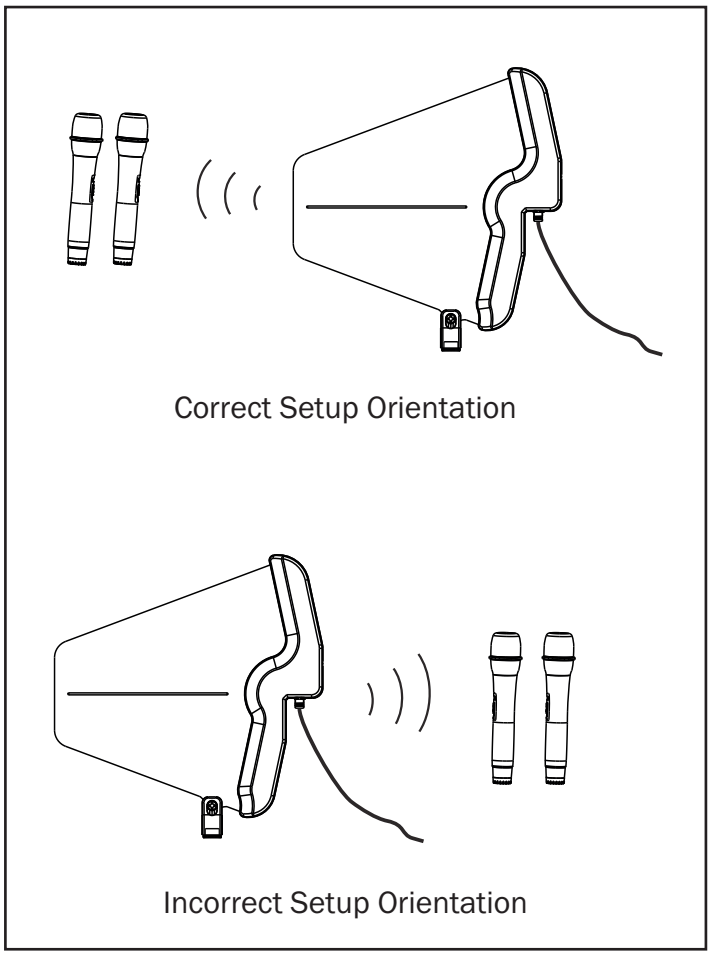
Correct Setup Orientation

Incorrect Setup Orientation

Connect the RPA2 UHF remote panel antennae to the ANTENNA A and ANTENNA B outputs using either the supplied 5m RF cables, or high quality 50Ω RF cables of up to 20m in length. All RF cables should be kept as short as possible in cable length to minimise any losses in the system.

Correct Disposal of this Product (Waste Electrical & Electronic Equipment)

(Applicable in the European Union and other European countries with separate collection systems)

This marking shown on the product or its literature, indicates that it should not be disposed with other household wastes at the end of its working life. To prevent possible harm to the environment or human health from uncontrolled waste disposal, please separate this from other types of wastes and recycle it responsibly to promote the sustainable reuse of material resources.

Household users should contact either the retailer where they purchased this product, or their local government office, for details of where and how they can take this item for environmentally safe recycling.

Business users should contact their supplier and check the terms and conditions of the purchase contract. This product should not be mixed with other commercial wastes for disposal.