SR 10
Passive Speaker

User Manual

Order codes:

SPEA71 - White housing

SPEA72 - Black housing

WARNING

FOR YOUR OWN SAFETY, PLEASE READ THIS USER MANUAL CAREFULLY BEFORE YOUR INITIAL START-UP!

DANGER TO LIFE!

BEFORE OPERATING THE SPEAKER FOR THE FIRST TIME, THE INSTALLATION HAS TO BE APPROVED BY AN EXPERT

- Immediately upon receiving this product, carefully unpack the carton and check the contents to ensure that all the parts are present.
- Before initial start-up, please make sure that there is no damage caused during transportation.
- Should there be any damage, consult your dealer and do not use the equipment.
- Retain the carton and all packaging materials.
- In the event that the equipment must be returned to the supplier, it is important that the equipment is returned in the original carton and packaging.
- To maintain the equipment in good working condition and to ensure safe operation, it is necessary for the user to follow the safety instructions and warning notes written in this manual.
- Please note that damages caused by user modifications to this equipment are not subject to warranty.

CAUTION!

KEEP THIS EQUIPMENT AWAY FROM MOISTURE, RAIN AND LIQUIDS, AND OUT OF DAMP/HUMID ENVIRONMENTS

IMPORTANT:

The manufacturer will not accept liability for any resulting damages caused by the non-observance of this manual or any unauthorised modification to the equipment.

- Never remove warning or informative labels from the equipment.
- Do not open or modify the equipment.
- Only use the equipment indoors.
- Do not expose to flammable sources, liquids or gases.
- If the equipment is dropped or damaged, have a qualified engineer inspect the equipment before operating again.
- If the product fails to function correctly, discontinue use immediately. Pack securely (preferably in the original packing material), and return to your dealer for service.
- This fixture is for professional use only - it is not designed for or suitable for household use. The product must be installed by a qualified technician in accordance with local territory regulations. The safety of the installation is the responsibility of the installer. The fixture presents risks of severe injury or death due to fire hazards, electric shock and falls.
- Repairs, servicing and power connection must only be carried out by a qualified technician. THIS UNIT CONTAINS NO USER SERVICEABLE PARTS.
- WARRANTY: One year from date of purchase.

OPERATING DETERMINATIONS

If this equipment is operated in any other way, than those described in this manual, the product may suffer damage and the warranty becomes void.

In case of malfunction this system should be returned for service or inspection.

Do not endanger your own safety and the safety of others!

Incorrect installation or use can cause serious damage to people and/or property.

Safe installation

Make sure that the area below the installation place is blocked when rigging, derigging or servicing the system. **Please note:** W Audio cannot be made liable for damages caused by incorrect installations and excessive noise levels.

Unpacking and transportation:

Unpack the unit and examine it for transport damage.
When boxed in the original packaging the speaker/sub should be carried by two persons of the same size. Carrying the speaker/sub with one person alone should be avoided as the heavy weight and strain could lead to back injury.

DANGER TO LIFE!
A FALLING SPEAKER SYSTEM CAN CAUSE DEADLY ACCIDENTS, ALL SAFETY INSTRUCTIONS GIVEN IN THIS MANUAL MUST BE OBSERVED.

WARNING!

LOUD NOISE HAZARD
EAR PROTECTION MUST BE WORN

Please note that speaker systems can move due to bass beats and vibrations.
Furthermore, unintended pushing on the speakers present a further risk. The speaker system must always be secured to prevent movement or the surrounding area has to be blocked.

The given maximum power of the speaker system describes short term peaks the system can handle as a maximum. The corresponding RMS power is - as of all comparable systems (also from other manufactures) - significantly lower. The maximum power of the speaker system must never be exceeded. When operating the speaker system, please make sure that the system always sounds clear. When distortion can be heard, either the amplifier or the loud speaker is being overdriven. Overloads can quickly lead to amplifier or speaker damage. In order to avoid damage, please reduce the volume immediately when distortion can be heard. When speaker systems are damaged by overdriving, the guarantee becomes void.

- The ambient temperature must always be between -5˚ C and +45˚ C.
  Keep away from direct sunlight (particularly in cars) and from heaters.
- The relative humidity must not exceed 50% with an ambient temperature of +45˚ C.
- This speaker system must only be installed at a solid, horizontal, anti-slip, vibration and oscillation free fire resistant location.
- Please note: When using this speaker system in public or industrial areas, a series of safety instructions have to be followed that this manual can only give in part. The operator must therefore inform himself on the current safety regulations.
- Before installing the system, make sure that the installation area can hold a minimum point load of 5 times the systems weight (e.g. weight 20kg - point load 100kg).
- The speaker system must never be installed higher than 100cm with out a secondary attachment.
- For over head installations (mounting height >100cm), always fix the speaker system with an appropriate safety cable.
- The installation area of the speaker system has to be built and constructed in a way that it can hold 10 times the weight of the speaker for 1 hour without any deformation.
- The installation area of the speaker system has to be built and constructed in a way that it can hold 10 times the weight of the speaker for 1 hour without any deformation.

DANGER TO LIFE - DUE TO FALLING SPEAKERS SYSTEMS!
THE SUBWOOFER MUST NEVER BE SUSPENDED.
THE MID/HIGH SPEAKER MUST ONLY BE SUSPENDED BY EXPERIENCED AND TRAINED PERSONS.

These speakers can be mounted on a speaker stand using the supplied adaptors. The carrying capacity of the extension pole and the speaker stand must never be exceeded.

SR 10 Passive Speaker

A full range, 2-way passive enclosure which is compact and provides a high output along with a smooth and dynamic reproduction. The cabinet can be used as a main speaker in small, near field applications or as a fill/delay element in multi enclosure systems. The wide coverage angle and the true constant directivity of the horn makes coverage of large audiences easy, the crossover design guarantees the perfect pattern matching of bass and compression drivers, avoiding secondary lobe creation.

- Continuous power (RMS): 250W
- Peak power: 1000W
- Maximum calculated SPL: 125dB
- Sensitivity (1W/1m): 95dB
- Frequency range (-10dB): 60Hz - 20kHz
- Frequency range (-3dB): 80Hz - 20kHz
- Crossover frequency: 2.5kHz
- Horizontal coverage: 90°
- Vertical coverage: 80°
- LF transducer: 10”
- HF transducer: 1”
- Nominal impedance: 8Ω
- Connections: 2 x speakON connectors
- Mounting options: 35mm top hat for pole mounting and multiple 10mm rigging points and pre-prepared mounting points on rear for BRAC03/BRAC04 bracket

Specifications	
Dimensions	485 x 310 x 320mm
Weight	15.7kg
Order code	SPEA71 - White housing, SPEA72 - Black housing

In the box:
1 x speaker

Technical drawings

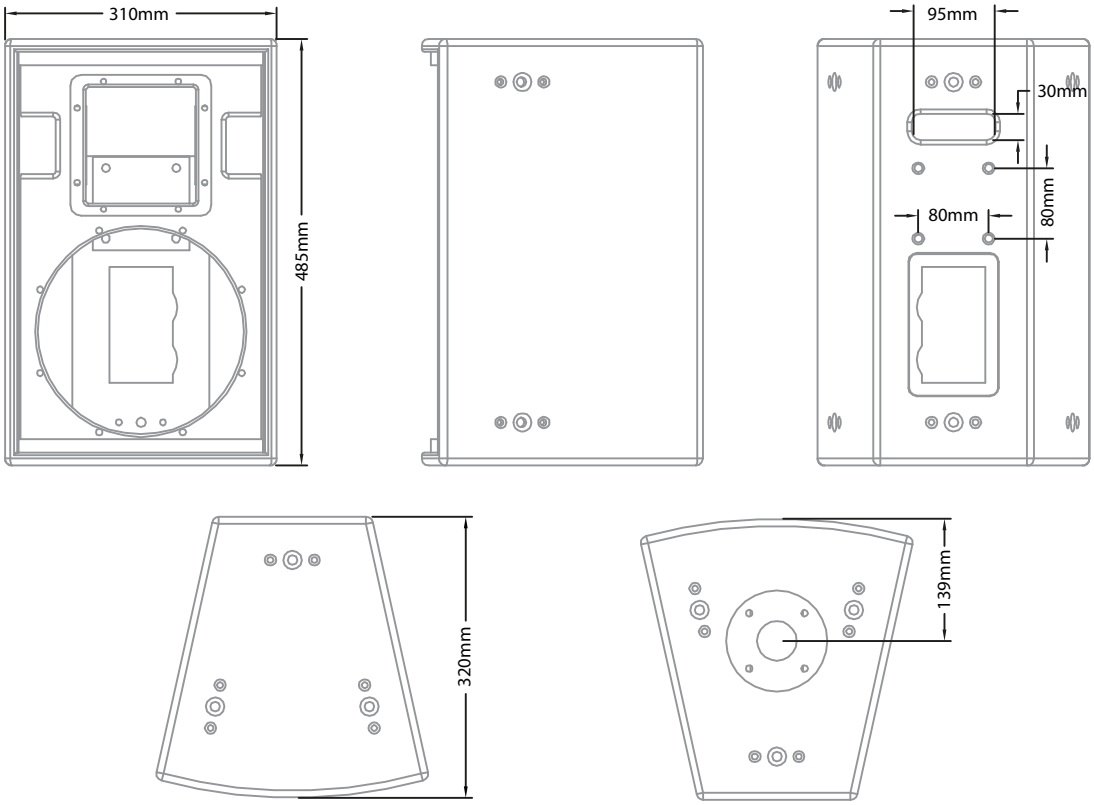

Rear panel

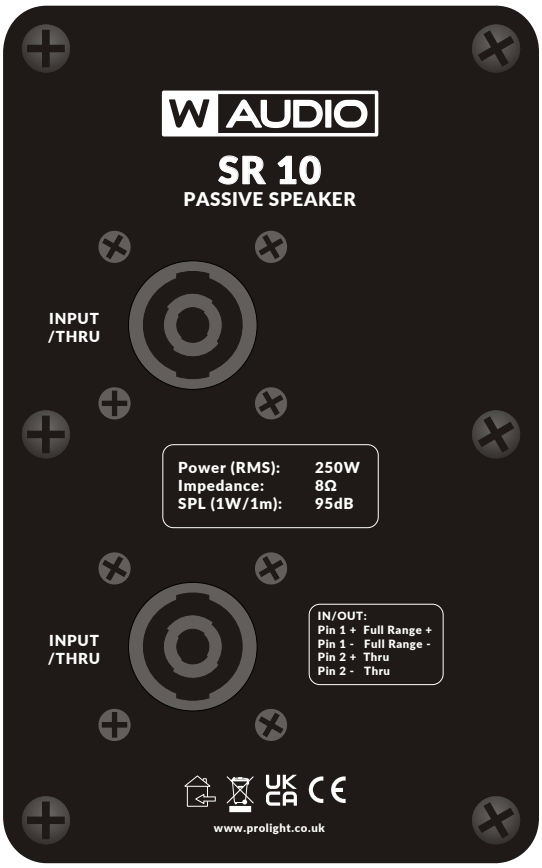

Block diagram

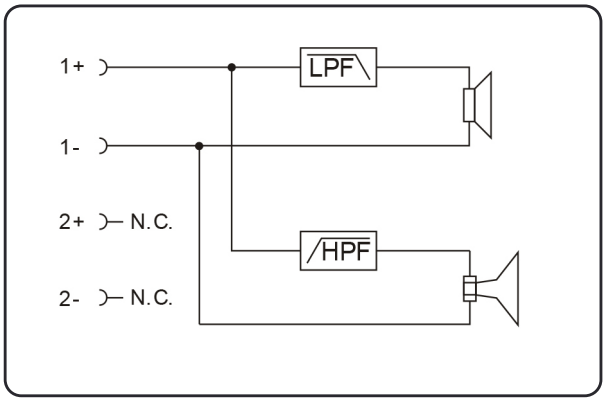

Frequency response

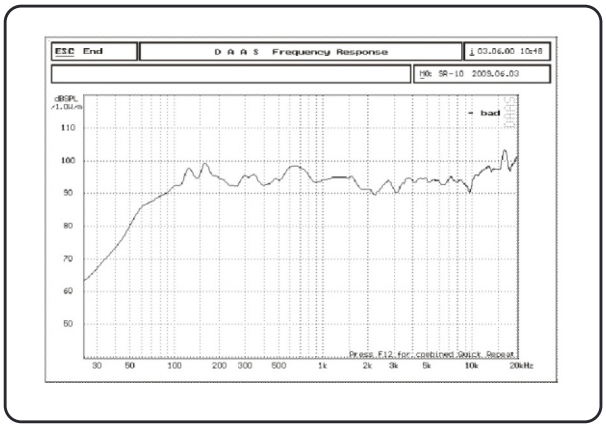

Correct Disposal of this Product (Waste Electrical & Electronic Equipment)

(Applicable in the European Union and other European countries with separate collection systems)

This marking shown on the product or its literature, indicates that it should not be disposed of with other household wastes at the end of its working life. To prevent possible harm to the environment or human health from uncontrolled waste disposal, please separate this from other types of wastes and recycle it responsibly to promote the sustainable reuse of material resources.

Household users should contact either the retailer where they purchased this product, or their local government office, for details of where and how they can take this item for environmentally safe recycling.

Business users should contact their supplier and check the terms and conditions of the purchase contract. This product should not be mixed with other commercial wastes for disposal.