Performer 200 Quad

V2

User Manual

Order code: LEDJ490

WARNING

FOR YOUR OWN SAFETY, PLEASE READ THIS USER MANUAL CAREFULLY BEFORE YOUR INITIAL START-UP!

- Before your initial start-up, please make sure that there is no damage caused during transportation.
- Should there be any damage, consult your dealer and do not use the equipment.
- To maintain the equipment in good working condition and to ensure safe operation, it is necessary for the user to follow the safety instructions and warning notes written in this manual.
- Please note that damages caused by user modifications to this equipment are not subject to warranty.

CAUTION!
KEEP THIS EQUIPMENT AWAY FROM RAIN, MOISTURE AND LIQUIDS

CAUTION!
TAKE CARE USING THIS EQUIPMENT!
HIGH VOLTAGE-RISK OF ELECTRIC SHOCK!!

IMPORTANT:

The manufacturer will not accept liability for any resulting damages caused by the non-observance of this manual or any unauthorised modification to the equipment.

- Never let the power cable come into contact with other cables. Handle the power cable and all mains voltage connections with particular caution!
- Never remove warning or informative labels from the unit.
- Do not open the equipment and do not modify the unit.
- Do not connect this equipment to a dimmer pack.
- Do not switch the equipment on and off in short intervals, as this will reduce the system's life.
- Only use the equipment indoors.
- Do not expose to flammable sources, liquids or gases.
- Always disconnect the power from the mains when equipment is not in use or before cleaning! Only handle the power-cable by the plug. Never pull out the plug by pulling the power-cable.
- Make sure that the available mains supply voltage is between 100~240V AC, 50/60Hz.
- Make sure that the power cable is never crimped or damaged. Check the equipment and the power cable periodically.
- If the equipment is dropped or damaged, disconnect the mains power supply immediately and have a qualified engineer inspect the equipment before operating again.
- If the equipment has been exposed to drastic temperature fluctuation (e.g. after transportation), do not connect power or switch it on immediately. The arising condensation might damage the equipment. Leave the equipment switched off until it has reached room temperature.
- If your product fails to function correctly, stop use immediately. Pack the unit securely (preferably in the original packing material), and return it to your Pro Light dealer for service.
- Only use fuses of same type and rating.
- Repairs, servicing and power connection must only be carried out by a qualified technician. THIS UNIT CONTAINS NO USER SERVICEABLE PARTS.
- This lighting fixture is for professional use only - it is not designed for or suitable for household use. The product must be installed by a qualified technician in accordance with local territory regulations. The safety of the installation is the responsibility of the installer. The fixture presents risks of severe injury or death due to fire hazards, electric shock and falls.
- Warning! Risk Group 2 LED product according to EN 62471. Do not view the light output with optical instruments or any device that may concentrate the beam.
- WARRANTY: One year from date of purchase.

OPERATING DETERMINATIONS

If this equipment is operated in any other way, than those described in this manual, the product may suffer damage and the warranty becomes void. Incorrect operation may lead to danger e.g: short-circuit, burns and electric shocks etc.

Do not endanger your own safety and the safety of others!

Incorrect installation or use can cause serious damage to people and/or property.

Please note: These fixtures are intended for stage lighting and entertainment applications only, and are not intended for extended periods of use, including but not limited to house-light, industrial or architectural applications and should only be operated with short duty cycles.

Performer 200 Quad

Featuring a huge 200W output, stylish housing and unsurpassed colour mixing via COB (Chip-on-Board) technology the Performer 200 Quad creates rich hues, colour changes and smooth fades from the 4-in-1 RGBW light source. Its output is comparable to a 1000W halogen sealed beam Par thanks to its special parabolic reflector which develops an extremely bright and homogenous output.

- 1 x 200W quad-colour LED (RGBW)
- Beam angle: 120°
- 2,020 Lux @ 2m (full on)
- 17.7kHz refresh rate
- DMX channels: 4 or 8 selectable
- Static colour, colour fade, colour change, auto run, sound active and master/slave modes
- 0 - 100% dimming and variable strobe
- 4 dimming curves: Linear, square law, inverse square law and S-curve
- Bracket allows for multiple rigging and floor standing applications
- 4 push button menu with LED display
- PowerCON input/output
- 3-Pin XLR input/output
- Temperature controlled fan

Specifications	Performer 200 Quad
Power consumption	210W
Power supply	100~240V, 50/60Hz
Fuse	F4A 250V
Dimensions	297 x 300 x 255mm
Weight	3.6kg
Order code	LEDJ490

120° - Lux					
FULL ON	8080	2020	897	505	323
R	1660	415	184	103	66
G	2720	680	302	170	108
B	1136	284	126	71	45
W	3748	937	416	234	149

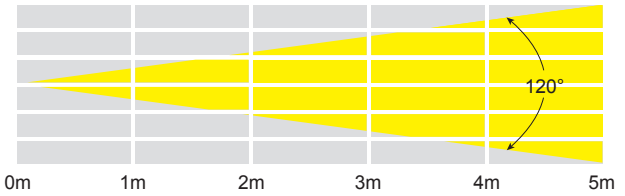

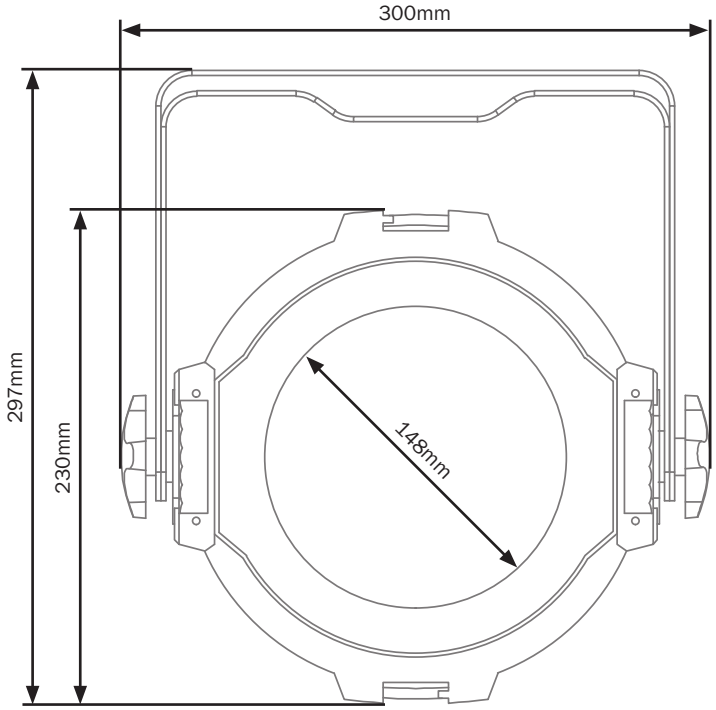

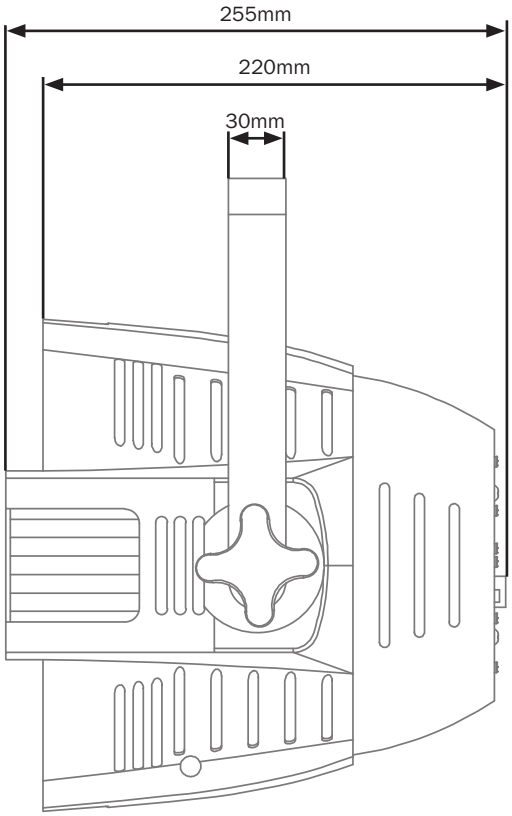

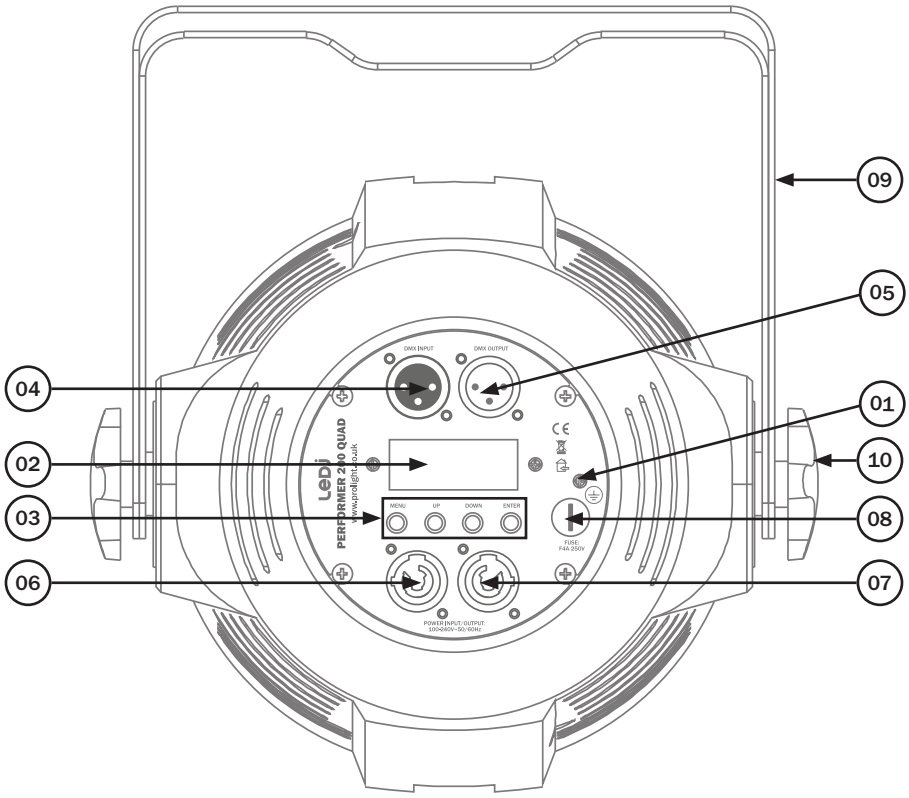

01 - Earth point
02 - LED display
03 - Function buttons
04 - 3-Pin DMX input
05 - 3-Pin DMX output
06 - PowerCON input
07 - PowerCON output
08 - Fuse: F4A 250V
09 - Hanging bracket
10 - Hanging bracket adjustable knob

In the box: **1 x fixture, 1 x power cable & 1 x user manual**

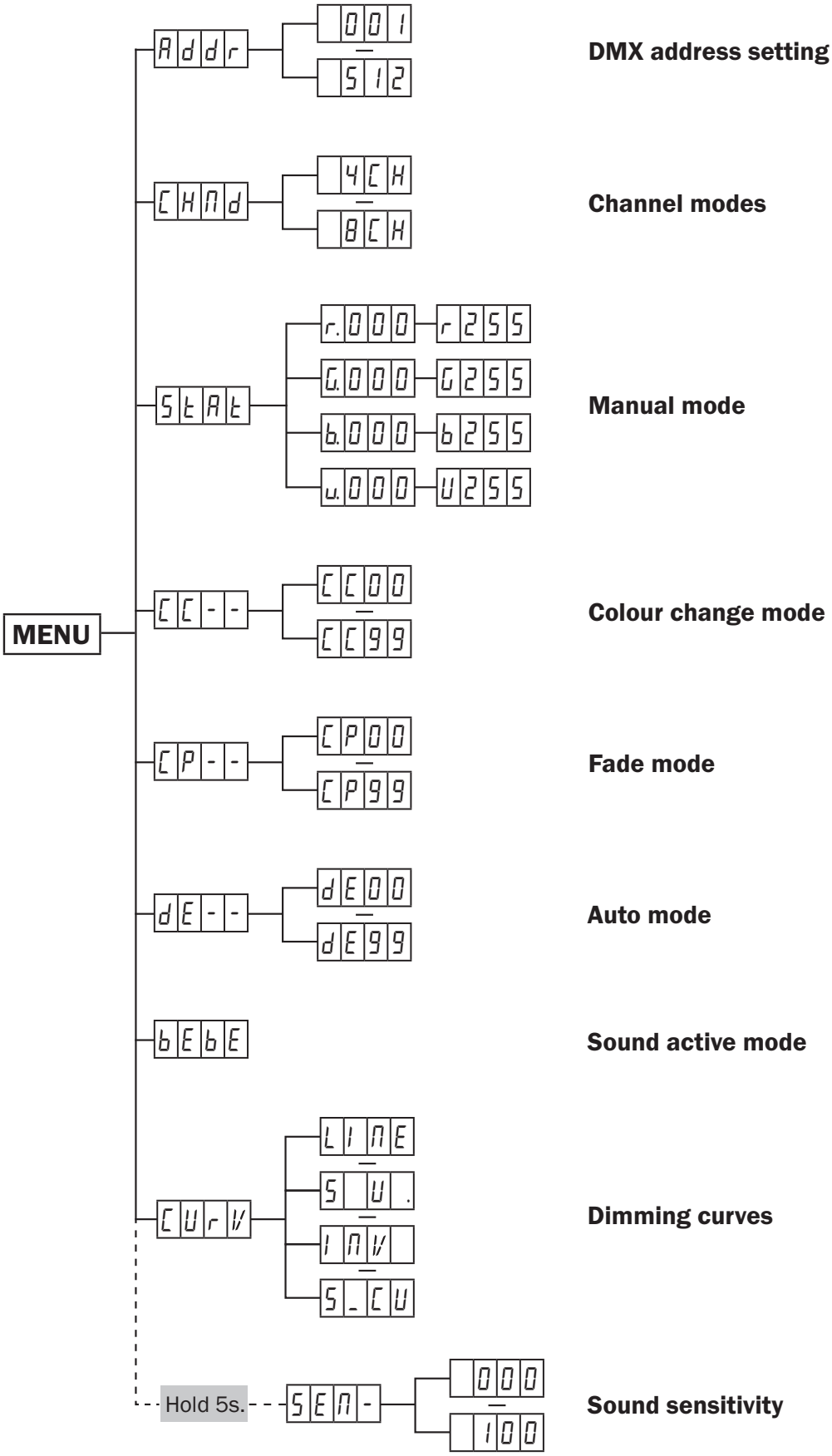
MENU
Addr
001
512
DMX address setting
CHNd
4CH
8CH
Channel modes
StAt
r.000
r255
G.000
G255
b.000
b255
u.000
U255
Manual mode
CC--
CC00
CC99
Colour change mode
CP--
CP00
CP99
Fade mode
dE--
dE00
dE99
Auto mode
bEbE
Sound active mode
CurV
LINE
SU.
INV
S_CU
Dimming curves
Hold 5s.
SEN-
000
100
Sound sensitivity

DMX mode:

To select the DMX address, press the "**MENU**" button to show d001 on the LED display. Now press the "**ENTER**" button and use the "**UP**" and "**DOWN**" buttons to select the DMX address between 000-512. To exit out of any of the above options, press the "**MENU**" button.

DMX channel mode:

Operating in a DMX control mode environment gives the user the greatest flexibility when it comes to customising or creating a show. In this mode you will be able to control each individual trait of the fixture and each fixture independently. To access the DMX channel mode, press the "**MENU**" button on the rear to show CHAN on the LED display. Now press the "**ENTER**" button and use the "**UP**" and "**DOWN**" buttons to select between 4CH and 8CH channel.
To exit out of any of the above options, press the "**MENU**" button.

4 channel mode:

Channel	Value	Function
1	000-255	Red (0-100%)
2	000-255	Green (0-100%)
3	000-255	Blue (0-100%)
4	000-255	White (0-100%)

8 channel mode:

Channel	Value	Function
1	000-255	Master dimmer (0-100%)
2	000-010	No function
	011-255	Strobe (slow-fast)
3	000-049	No function
	050-099	Colour change
	100-149	Colour fade
	150-199	Colour fade in/out
	200-255	Sound active
4	000-255	Chase/fade speed (slow to fast)
5	000-255	Red (0-100%)
6	000-255	Green (0-100%)
7	000-255	Blue (0-100%)
8	000-255	White (0-100%)

Static colour mode:

To access the static colour mode press "**MENU**" until StAt shows on the LED display.
Press the "**ENTER**" button and use the "**UP**" and "**DOWN**" buttons to select the brightness between r.000 ~ r.255. Press the "**ENTER**" button and repeat for green (G), blue (b) and white (u).
Value: 000 - 255 (000 = low brightness, 255 = high brightness)
To exit out of any of the above options, press the "**MENU**" button.

Colour change mode:

To access colour change mode press "**MENU**" until the display shows CC-- on the LED display. Press "**ENTER**" to confirm the setting. Use the "**UP**" and "**DOWN**" buttons to ajust the speed between CC00 ~ CC99. Press the "**ENTER**" button to confirm the setting.

To exit out of any of the above options, press the "**MENU**" button.

Colour fade mode:

To access colour fade mode press "**MENU**" until the display shows CP-- on the LED display. Press "**ENTER**" to confirm the setting. Use the "**UP**" and "**DOWN**" buttons to ajust the speed between CP00 ~ CP99. Press the "**ENTER**" button to confirm the setting.

To exit out of any of the above options, press the "**MENU**" button.

Auto mode:

To access auto mode press "**MENU**" until the display shows dE-- on the LED display. Press "**ENTER**" to confirm the setting. Use the "**UP**" and "**DOWN**" buttons to ajust the speed between dE00 ~ dE99. Press the "**ENTER**" button to confirm the setting.

To exit out of any of the above options, press the "**MENU**" button.

Master/slave mode:

To set the master unit, press the "**MENU**" button on the rear of the master unit to select your desired program (sound active, auto, static colour or colour fade).
To set the other units in slave mode, press the "**MENU**" button on the rear of the unit to show d001 on the LED display and press the "**ENTER**" button to confirm the setting. The units will now run in sequence with the master unit. To exit out of any of the above options, press the "**MENU**" button.
Please ensure that all slave units are set to the same DMX channel mode as the master unit.

Sound active mode:

To access the sound active mode, press the "**MENU**" button on the rear of the unit to show bEbE on the LED display. The unit will now respond to sound.

To exit out of any of the above options, press the "**MENU**" button.

Sound sensitivity:

To adjust the sound sensitivity, press and hold the "**MENU**" button for 5 seconds and use the "**UP**" and "**DOWN**" buttons on the rear of the unit to show SEN_ on the LED display. Now press the "**ENTER**" button and use the "**UP**" and "**DOWN**" buttons to choose between 000~ 100. Press the "**ENTER**" button to confirm the setting. Value: 0 - 100 (0 = low, 100 = high)

To exit out of any of the above options, press the "**MENU**" button.

Dimming curves:

To access colour fade mode press "**MENU**" until the display shows CUrU on the LED display. Now press the "**ENTER**" button and use the "**UP**" and "**DOWN**" buttons to choose between LINE (Linear), SQU (Square), INU (Inverse square) or S_CU (S-Curve).
Press the "**ENTER**" button to confirm the setting.

To exit out of any of the above options, press the "**MENU**" button.

Setting the DMX address:

The DMX mode enables the use of a universal DMX controller. Each fixture requires a “start address” from 1- 512. A fixture requiring one or more channels for control begins to read the data on the channel indicated by the start address. For example, a fixture that occupies or uses 7 channels of DMX and was addressed to start on DMX channel 100, would read data from channels: 100, 101, 102, 103, 104, 105 and 106. Choose a start address so that the channels used do not overlap. E.g. the next unit in the chain starts at 107.

DMX 512:

DMX (Digital Multiplex) is a universal protocol used as a form of communication between intelligent fixtures and controllers. A DMX controller sends DMX data instructions form the controller to the fixture. DMX data is sent as serial data that travels from fixture to fixture via the DATA “IN” and DATA “OUT” XLR terminals located on all DMX fixtures (most controllers only have a data “out” terminal).

DMX linking:

DMX is a language allowing all makes and models of different manufactures to be linked together and operate from a single controller, as long as all fixtures and the controller are DMX compliant. To ensure proper DMX data transmission, when using several DMX fixtures try to use the shortest cable path possible. The order in which fixtures are connected in a DMX line does not influence the DMX addressing. For example; a fixture assigned to a DMX address of 1 may be placed anywhere in a DMX line, at the beginning, at the end, or anywhere in the middle. When a fixture is assigned a DMX address of 1, the DMX controller knows to send DATA assigned to address 1 to that unit, no matter where it is located in the DMX chain.

DATA cable (DMX cable) requirements (for DMX operation):

This fixture can be controlled via DMX-512 protocol. The DMX address is set on the back of the unit. Your unit requires a standard 3-pin XLR connector for data input/output, see images below.

Further DMX cables can be purchased from all good sound and lighting suppliers or Prolight Concepts dealers.
Please quote: 3-Pin: **CABL10 – 2m** **CABL11 – 5m** **CABL12 – 10m**

Also remember that DMX cable must be daisy chained and cannot be split.

Notice:

Be sure to follow the diagrams below when making your own cables. Do not connect the cables shield conductor to the ground lug or allow the shield conductor to come in contact with the XLRs outer casing. Grounding the shield could cause a short circuit and erratic behaviour.

Pin Configuration	
3-Pin	5-Pin
Pin 1 - Ground	
Pin 2 - Negative	
Pin 3 - Positive	
–	Pin 4 - N/C
–	Pin 5 - N/C

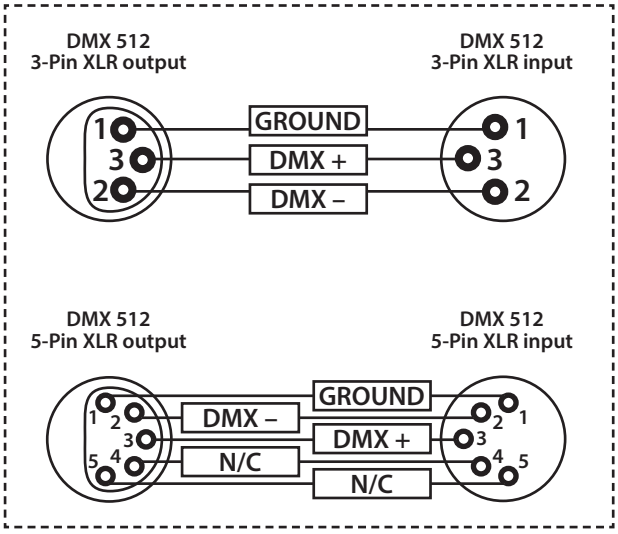

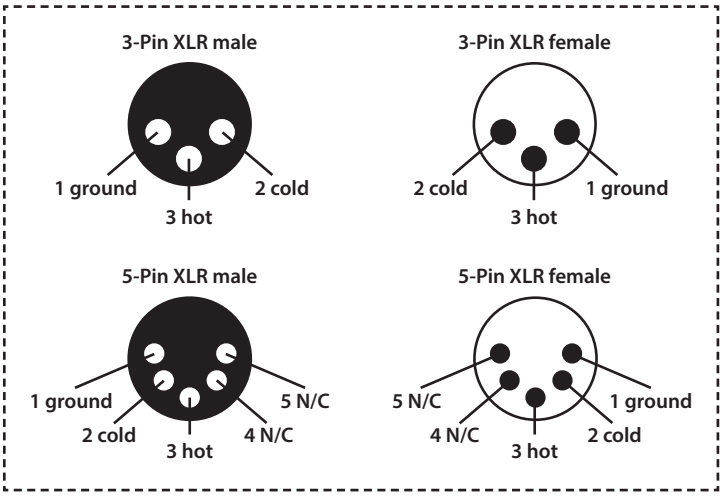

Line termination:

When longer runs of cable are used, you may need to use a terminator on the last unit to avoid erratic behaviour.

Using a cable terminator will decrease the possibilities of erratic behaviour. (3-pin - Order ref: CABL90, 5-pin - Order ref: CABL89)

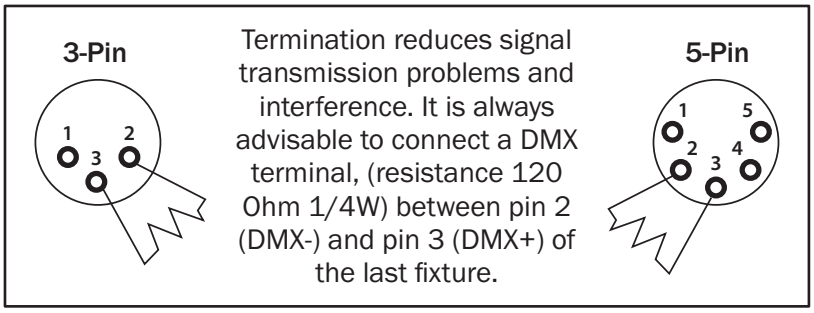

Termination reduces signal transmission problems and interference. It is always advisable to connect a DMX terminal, (resistance 120 Ohm 1/4W) between pin 2 (DMX-) and pin 3 (DMX+) of the last fixture.

5-pin XLR DMX connectors:

Some manufactures use 5-pin XLR connectors for data transmission in place of 3-pin. 5-pin XLR fixtures may be implemented in a 3-pin XLR DMX line. When inserting standard 5-pin XLR connectors in to a 3-pin line a cable adaptor must be used. The diagram below details the correct cable conversion.

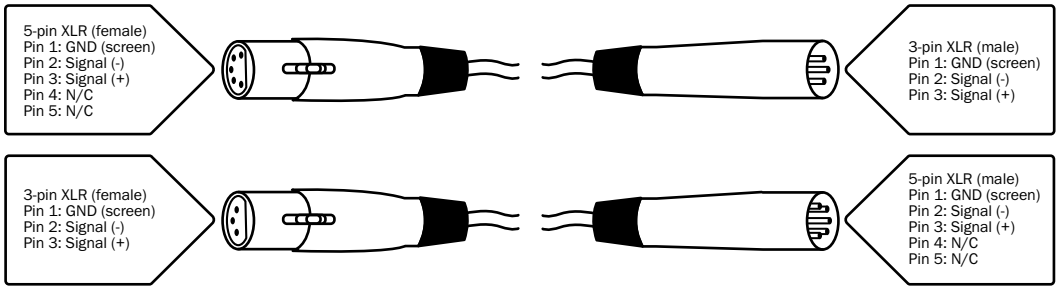

Power linking:

This fixture provides power linking via the power output on the rear allowing multiple units to be connected together. The maximum number of fixtures that can be connected is 10 fixtures @ 240V or 5 fixtures @ 120V (including the first fixture). After the maximum number of fixtures are connected a new power run will need to be started.

Please note: Caution should be used when power linking other fixtures to the Performer 200 Quad as the power consumption of other fixtures will vary. Fixtures fitted with lamps often require 2/3 times more current on startup, these may require their own power source.

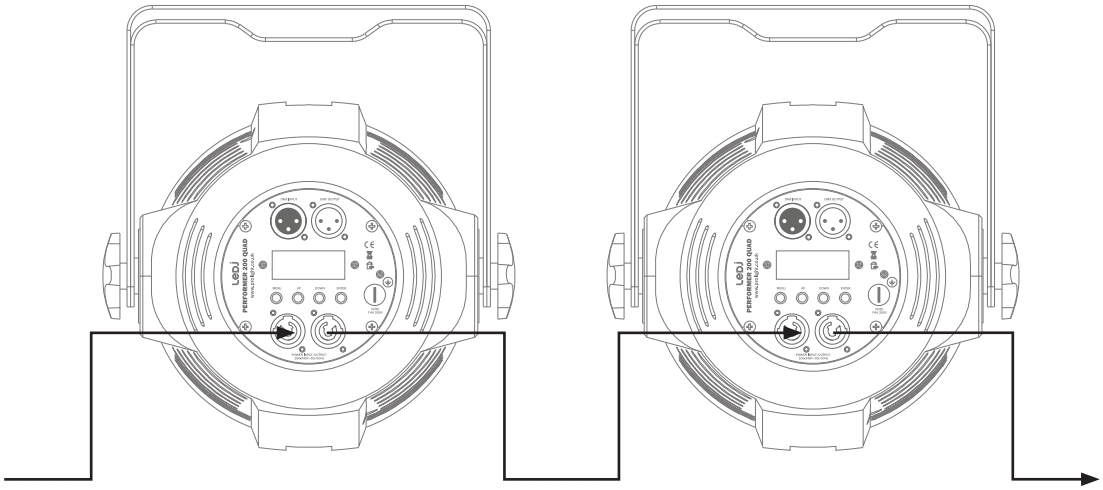

Correct Disposal of this Product (Waste Electrical & Electronic Equipment)

(Applicable in the European Union and other European countries with separate collection systems)

This marking shown on the product or its literature, indicates that it should not be disposed with other household wastes at the end of its working life. To prevent possible harm to the environment or human health from uncontrolled waste disposal, please separate this from other types of wastes and recycle it responsibly to promote the sustainable reuse of material resources.

Household users should contact either the retailer where they purchased this product, or their local government office, for details of where and how they can take this item for environmentally safe recycling.

Business users should contact their supplier and check the terms and conditions of the purchase contract. This product should not be mixed with other commercial wastes for disposal.