EQUINOX

Fusion 150 Spot

User Manual

Order codes: EQLED075

WARNING

FOR YOUR OWN SAFETY, PLEASE READ THIS USER MANUAL CAREFULLY BEFORE YOUR INITIAL START-UP!

- Before your initial start-up, please make sure that there is no damage caused during transportation.
- Should there be any damage, consult your dealer and do not use the equipment.
- To maintain the equipment in good working condition and to ensure safe operation, it is necessary for the user to follow the safety instructions and warning notes written in this manual.
- Please note that damages caused by user modifications to this equipment are not subject to warranty.

CAUTION!
KEEP THIS EQUIPMENT AWAY FROM RAIN, MOISTURE AND LIQUIDS

CAUTION!
TAKE CARE USING THIS EQUIPMENT!
HIGH VOLTAGE-RISK OF ELECTRIC SHOCK!!

IMPORTANT:

The manufacturer will not accept liability for any resulting damages caused by the non-observance of this manual or any unauthorised modification to the equipment.

- Never let the power cable come into contact with other cables. Handle the power cable and all mains voltage connections with particular caution!
- Never remove warning or informative labels from the unit.
- Do not open the equipment and do not modify the unit.
- Do not connect this equipment to a dimmer pack.
- Do not switch the equipment on and off in short intervals, as this will reduce the system's life.
- Only use the equipment indoors.
- Do not expose to flammable sources, liquids or gases.
- Always disconnect the power from the mains when equipment is not in use or before cleaning! Only handle the power-cable by the plug. Never pull out the plug by pulling the power-cable.
- Make sure that the available mains supply voltage is between 100~240V AC, 50/60Hz.
- Make sure that the power cable is never crimped or damaged. Check the equipment and the power cable periodically.
- If the equipment has been exposed to drastic temperature fluctuation (e.g. after transportation), do not connect power or switch it on immediately. The arising condensation might damage the equipment. Leave the equipment switched off until it has reached room temperature.
- Never touch the fixture during operation as it may be hot.
- If the equipment is dropped or damaged, disconnect the mains power supply immediately and have a qualified engineer inspect the equipment before operating again.
- If your product fails to function correctly, stop use immediately. Pack the unit securely (preferably in the original packing material), and return it to your Pro Light dealer for service.
- Only use fuses of same type and rating.
- Repairs, servicing and power connection must only be carried out by a qualified technician. THIS UNIT CONTAINS NO USER SERVICEABLE PARTS.
- This lighting fixture is for professional use only - it is not designed for or suitable for household use. The product must be installed by a qualified technician in accordance with local territory regulations. The safety of the installation is the responsibility of the installer. The fixture presents risks of severe injury or death due to fire hazards, electric shock and falls.
- Warning! Risk Group 2 LED product according to EN 62471. Do not view the light output with optical instruments or any device that may concentrate the beam.
- WARRANTY: One year from date of purchase.

OPERATING DETERMINATIONS

If this equipment is operated in any other way, than those described in this manual, the product may suffer damage and the warranty becomes void. Incorrect operation may lead to danger e.g: short-circuit, burns and electric shocks etc.
Do not endanger your own safety and the safety of others!
Incorrect installation or use can cause serious damage to people and/or property.

Please note: These fixtures are intended for stage lighting and entertainment applications only, and are not intended for extended periods of use, including but not limited to house-light, industrial or architectural applications and should only be operated with short duty cycles.

This fixture falls under Protection Class 1, therefore it has to be connected to a mains socket with a protective earthing connection.

Risk group 2, RG-2: CAUTION!
Do not stare at exposed LED in operation as it may damage/be harmful to the eyes. Avoid looking directly into the light source.

CAUTION!
The maximum ambient temperature (Ta) of 40° must not be exceeded.

CAUTION!
If the lens gets damaged ie. cracks or deep scratches so the output is impaired then it must be replaced.

Fusion 150 Spot

The Fusion 150 Spot is a versatile lighting fixture powered by a robust 150W white LED, boasting a 16° beam angle and motorized focus for sharp projections. Elevate visual displays with its 3-facet circular rotating prism, dual gobo wheels (6 rotating, replaceable gobos, and 7 static gobos), and a colour wheel offering 7 vibrant colours. Seamlessly switch between DMX, auto, sound active, manual control and master/slave modes using the intuitive 4 button menu.

- 1 x 150W white LED (8500K)
- Beam angle: 16°
- 17,855 Lux @ 2m
- 2.9kHz refresh rate
- Motorised focus
- 3 facet circular rotating prism
- Frost filter (48°)
- Gobo wheel 1: 6 rotating, rotating, replaceable gobos + open
- Gobo wheel 2: 7 static gobos + open
- Colour wheel: 7 colours + open
- DMX channels: 2/14 or 18 selectable
- Auto, sound active, manual control and master/slave modes
- Forward facing show mode
- Pan/tilt auto correction
- 16-Bit pan/tilt positioning
- Pan: 540°, Tilt: 270°
- 0 - 100% dimming
- Variable strobe
- Quick release omega clamps included
- Square hole spacing on omega clamp receivers allows for clamps to be mounted in all orientations
- 4 button menu with 2.6” LCD display
- powerCON input/output
- 3-Pin XLR input/output
- Fan cooled

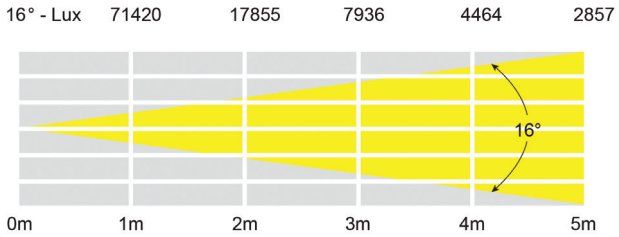

Specifications	Fusion 150 Spot
Power consumption	170W
Power supply	100~240V, 50/60Hz
Fuse	F4A 250V
Dimensions	410 x 302 x 195mm
Weight	9.2kg
Order code	EQLED075

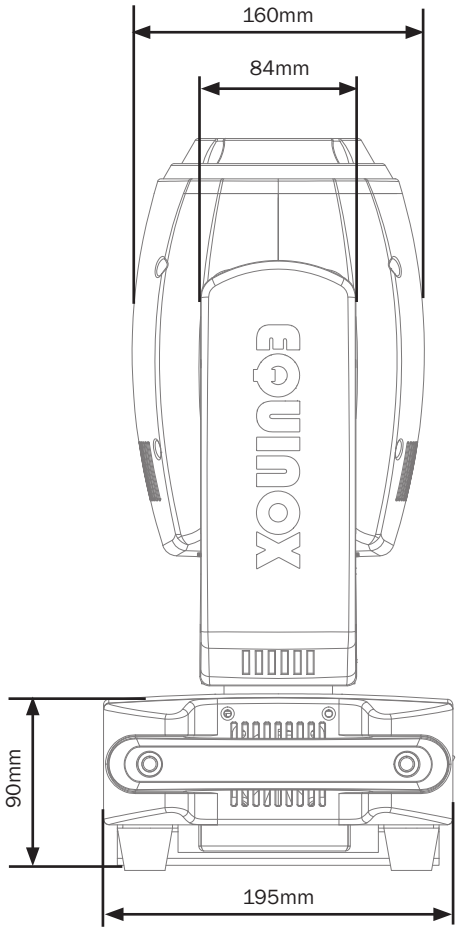
160mm
84mm
90mm
195mm

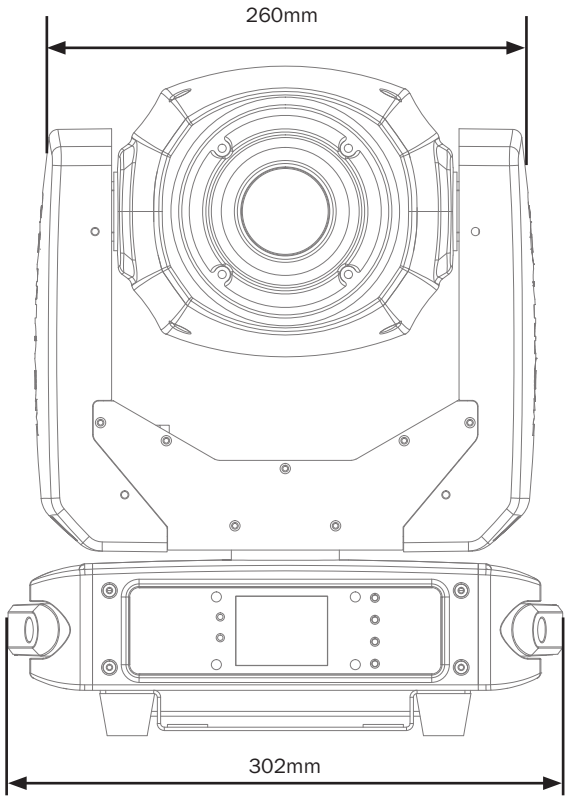
260mm
302mm

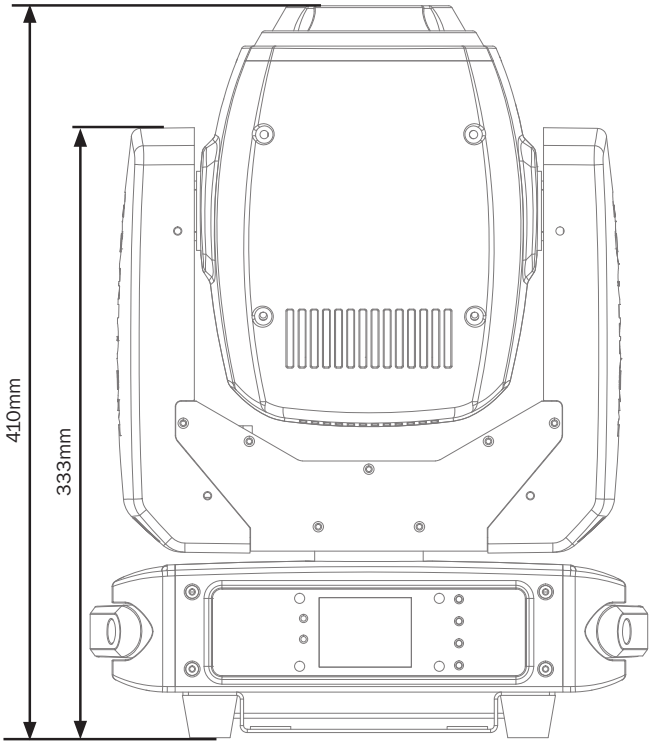
410mm
333mm

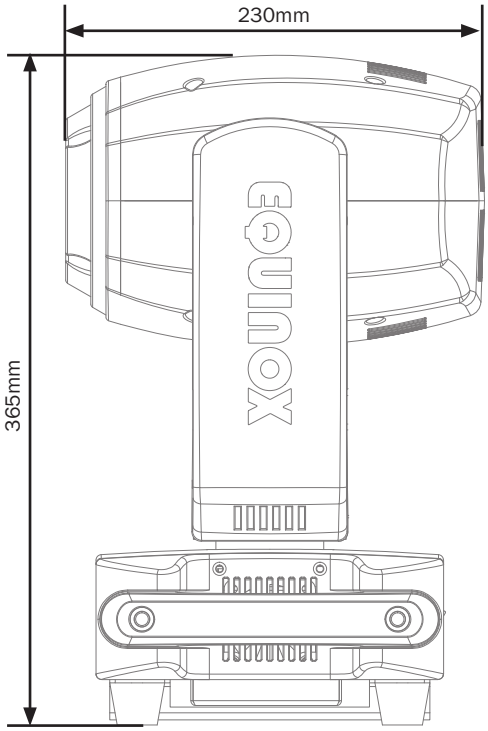
230mm
365mm

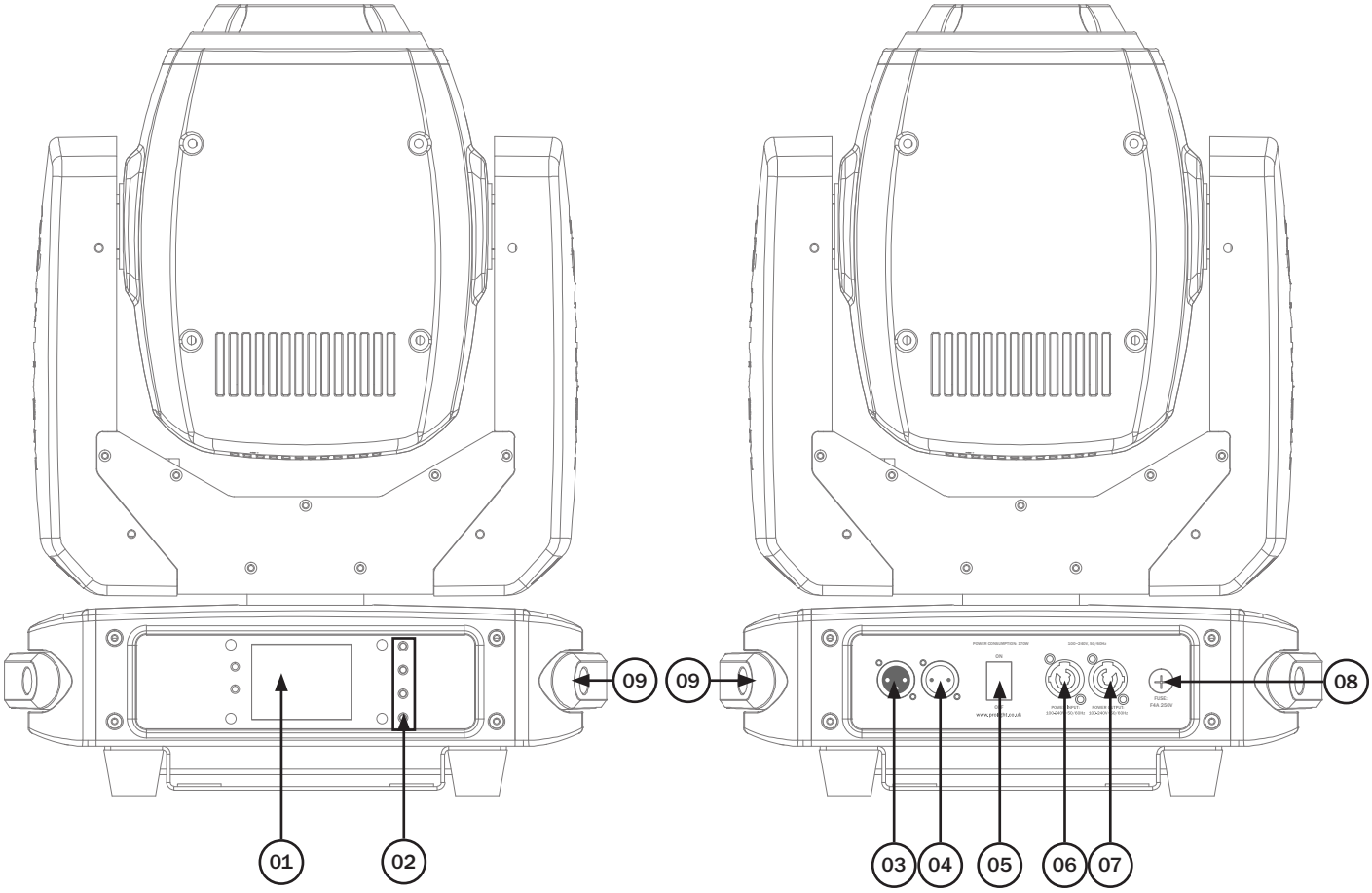

01 - LCD display
02 - Function buttons
03 - 3-Pin DMX input
04 - 3-Pin DMX output
05 - Power switch
06 - powerCON input
07 - powerCON output
08 - Fuse F4A 250V
09 - Carry handles

In the box: **1 x fixture, 2 x omega clamps, & 1 x power cable**

Before installing the fixture, the supporting structure (ie. truss) must be able to hold a minimum of 10 times the fixtures weight without any deformation (eg. 15kg - 150kg point load). The fixture must be secured with a secondary safety attachment when being installed (ie. an appropriate safety cable). Never stand directly below the fixture when mounting, removing, and/or servicing.

Overhead installation requires experience and qualifications to calculate working load limits, the material being used at the installation area and periodic safety inspections of the fixture and installation material. If you do not have the relevant experience and/or qualifications please do not attempt the installation yourself. The installation should be checked annually by a qualified person.

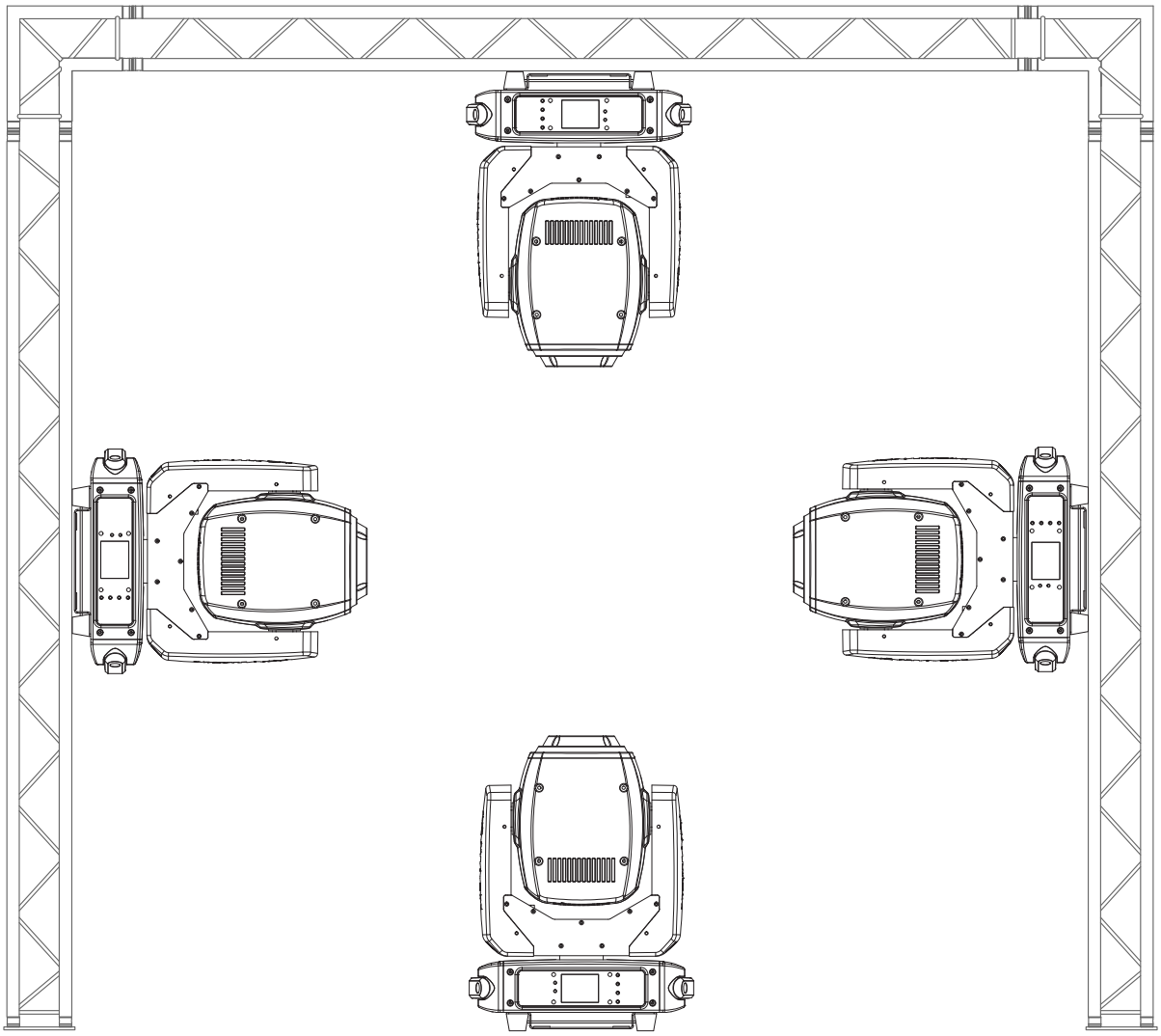

The Equinox Fusion 150 Spot can be operated in a number of mounting positions as shown in the diagram above, hanging upside-down from the ceiling or truss, mounting sideways on truss or stood upright on a flat level surface. Always use a safety wire as an extra safety precaution to prevent damage/injury in the event a clamp fails (see the next page for clamp installation).
Never use the carry handles for secondary attachments.

Installation:

1. Fasten each clamp to the omega clamps with a bolt and lock nut through the hole in the omega clamp.

2. Align and insert the omega clamp quick-lock fasteners with the respective holes on the bottom of the unit.

3. Tighten both locking fasteners clockwise on each omega clamp ensuring they're fully secure.

4. Mount the fixture onto your truss system via the clamps and tighten to ensure secure.

5. Pull the safety cable through the safety cable holes located on the metal base plate on the underside of the fixture and around the truss.

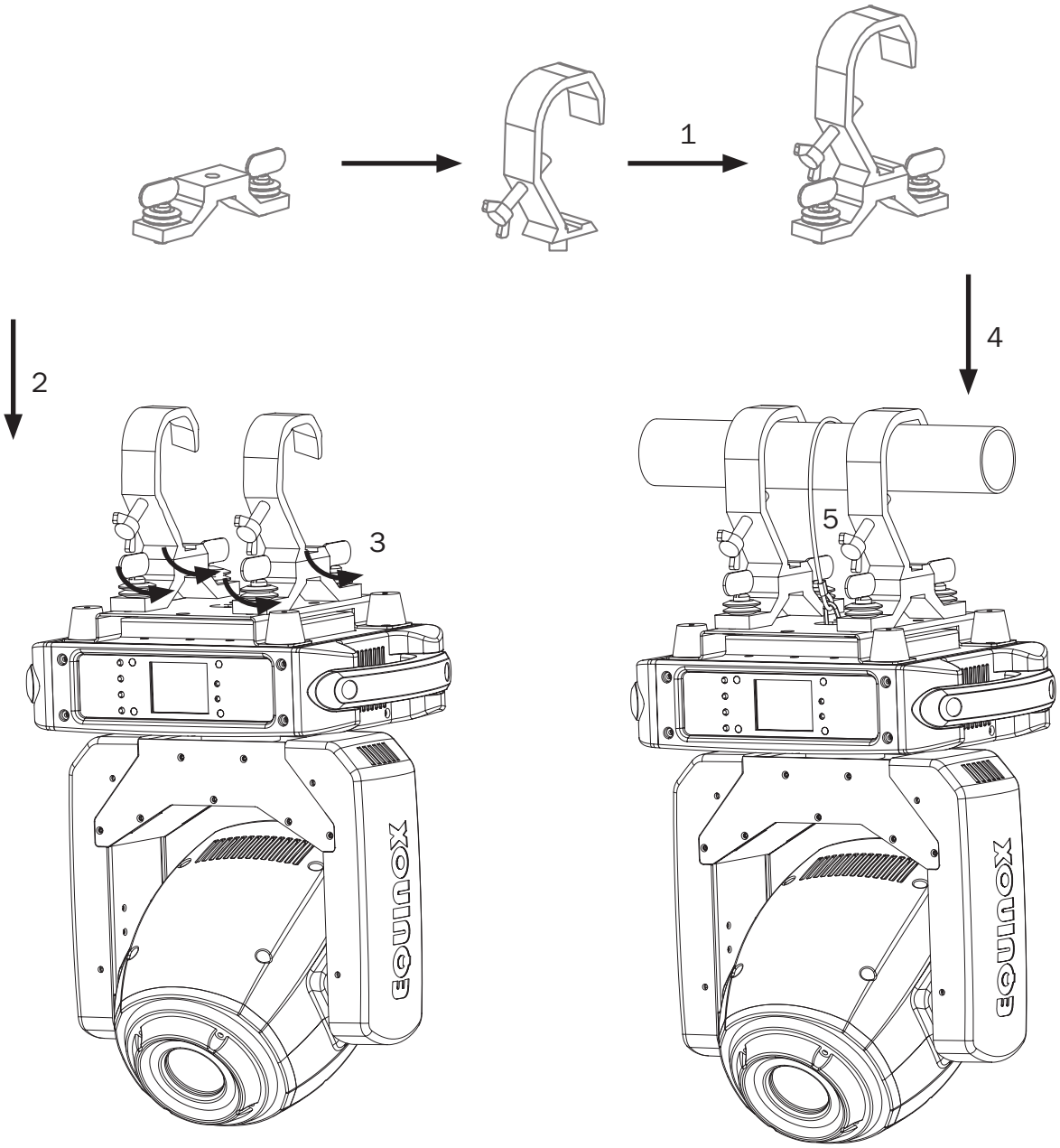

Control Panel Menu:

The LCD control panel situated on the front of the fixture allows the user to access the menu system to adjust the fixtures settings.

When the unit has been powered on the display will show "**Equinox Fusion 150 Spot**", "**Motor Reset... Please Wait...**" whilst the unit performs its motor reset.
The fixture will then return to its home screen.

Pressing the "**MENU**" button once will take the user to the fixtures main menu. Using the "**UP**" and "**DOWN**" buttons you can then navigate between the different options in the main menu. Pressing the "**ENTER**" button on one of these options allows you to access the sub menu where you can use the "**UP**" and "**DOWN**" buttons to select option/value required. Once the option/value has been selected press the "**ENTER**" button once more to confirm the setting.
To exit out of any of the above options, press the "**MENU**" button.

Main Menu - Defaults are in grey

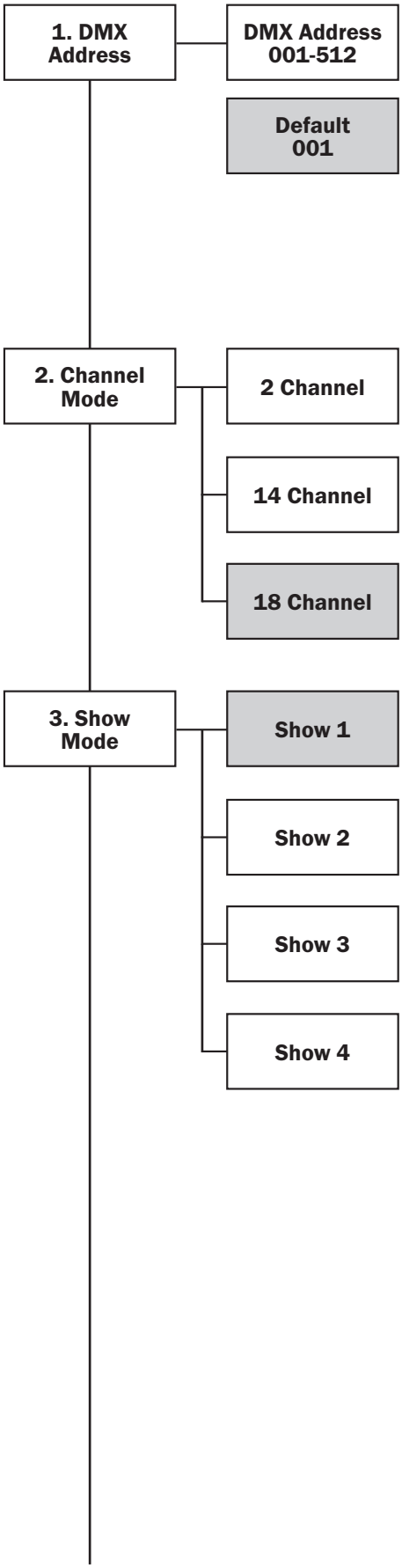

DMX address:

To access the DMX address mode, press the "**ENTER**" button and use the "**UP**" and "**DOWN**" buttons to show "**DMX Address**" on the LCD display. Now press the "**ENTER**" button and use the "**UP**" and "**DOWN**" buttons to set the required DMX address. Press the "**ENTER**" button to confirm the setting.

DMX channel mode:

To access the DMX channel mode, press the "**ENTER**" button and use the "**UP**" and "**DOWN**" buttons to show "**Channel Mode**" on the LCD display. Now press the "**ENTER**" button and use the "**UP**" and "**DOWN**" buttons to set the required DMX channel. Press the "**ENTER**" button to confirm the setting.

Show mode:

To access the show modes, press the "**ENTER**" button and use the "**UP**" and "**DOWN**" buttons to show "**Show Mode**" on the LCD display. Now press the "**ENTER**" button and use the "**UP**" and "**DOWN**" buttons to set the required show mode. Press the "**ENTER**" button to confirm the setting.

Show 4 is a forward facing show mode.

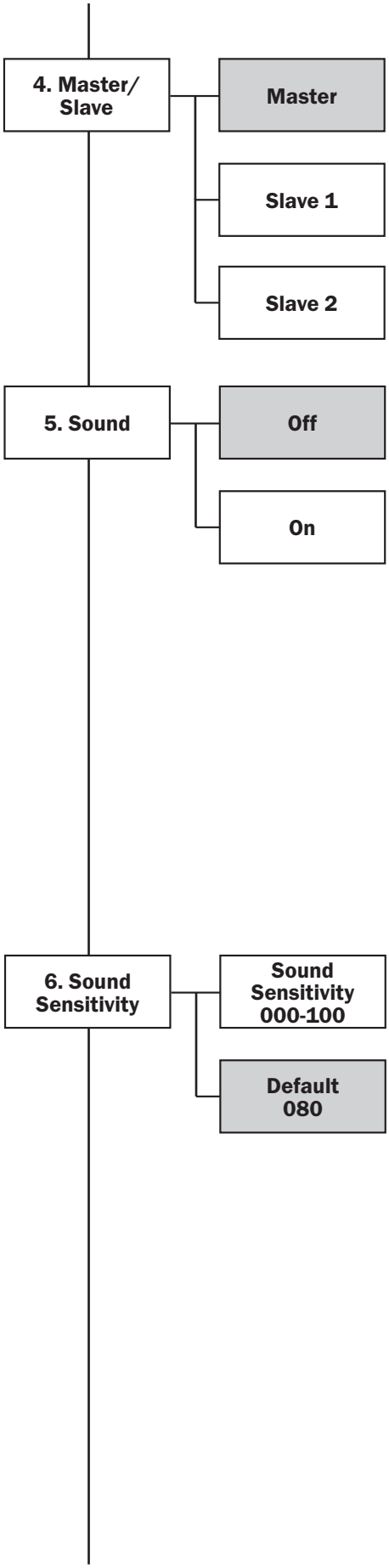

Master/slave mode:

To access the master/slave modes, press the "**ENTER**" button and use the "**UP**" and "**DOWN**" buttons to show "**Master/Slave**" on the LCD display. Now press the "**ENTER**" button and use the "**UP**" and "**DOWN**" buttons to set the required mode. Press the "**ENTER**" button to confirm the setting.

Sound mode:

To access the sound mode setting, press the "**ENTER**" button and use the "**UP**" and "**DOWN**" buttons to show "**Sound**" on the LCD display. Now press the "**ENTER**" button and use the "**UP**" and "**DOWN**" buttons to select between "**ON**" and "**OFF**". Press the "**ENTER**" button to confirm the setting.

*Once sound mode is set to "**ON**" in the secondary unit please then go and select the same show mode as set on the primary unit.

Sound sensitivity:

To access the sound sensitivity setting, press the "**ENTER**" button and use the "**UP**" and "**DOWN**" buttons to show "**Sound Sensitivity**" on the LCD display. Now press the "**ENTER**" button and use the "**UP**" and "**DOWN**" buttons to select between "**000**" and "**100**". Press the "**ENTER**" button to confirm the setting.

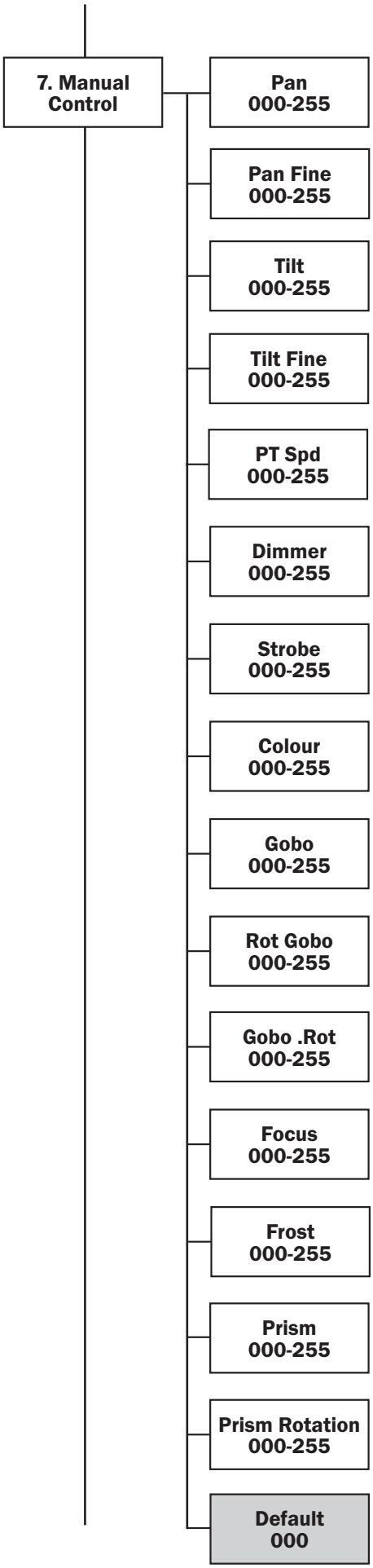

Manual control:

To access manual control mode, press the "**ENTER**" button and use the "**UP**" and "**DOWN**" buttons to show "**Manual Control**" on the LCD display. Press the "**ENTER**" button and use the "**UP**" and "**DOWN**" buttons to select the various options. Press the "**ENTER**" button and use the "**UP**" and "**DOWN**" buttons to select between "**000**" - "**255**". Press the "**ENTER**" button to confirm the setting.

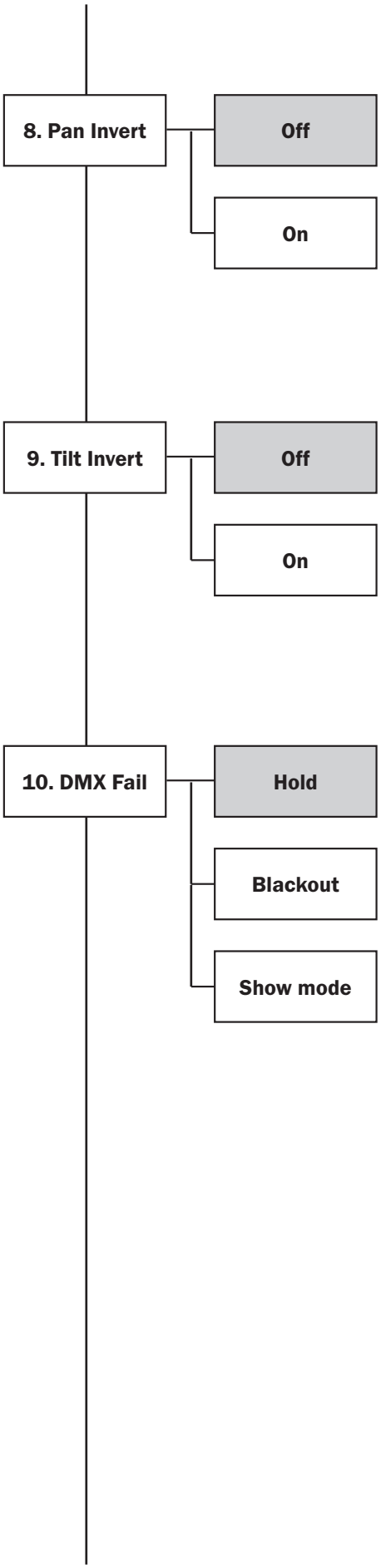

Pan invert:

To access the pan invert setting, press the "**ENTER**" button and use the "**UP**" and "**DOWN**" buttons to show "**Pan Invert**" on the LCD display. Press the "**ENTER**" button and use the "**UP**" and "**DOWN**" buttons to select between "**No**" and "**Yes**". Press the "**ENTER**" button to confirm the setting.

Tilt invert:

To access the tilt invert setting, press the "**ENTER**" button and use the "**UP**" and "**DOWN**" buttons to show "**Tilt Invert**" on the LCD display. Press the "**ENTER**" button and use the "**UP**" and "**DOWN**" buttons to select between "**No**" and "**Yes**". Press the "**ENTER**" button to confirm the setting.

DMX fail:

Sets what the fixture does when the DMX signal is lost. To access the DMX fail setting, press the "**ENTER**" button and use the "**UP**" and "**DOWN**" buttons to show "**DMX Fail**" on the LCD display. Now press the "**ENTER**" button and use the "**UP**" and "**DOWN**" buttons to choose between "**Blackout**", "**Hold**" or "**Show mode**". Press the "**ENTER**" button to confirm the setting.

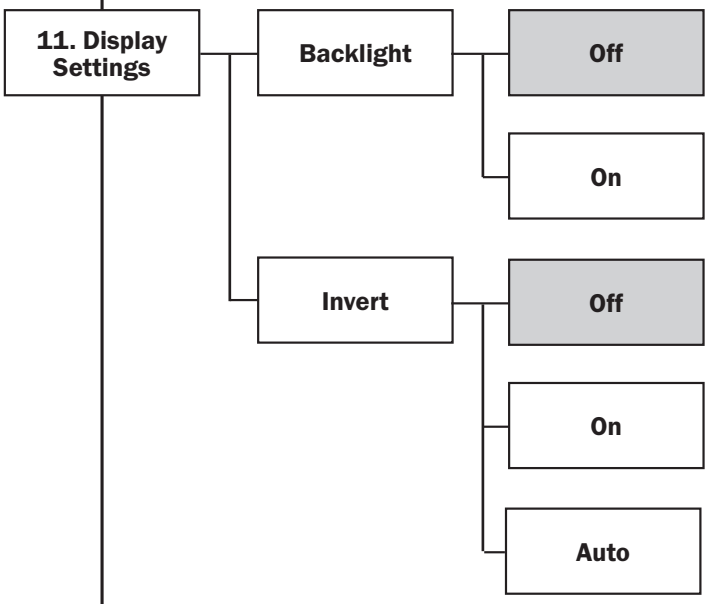

Display backlight:

To access the display backlight setting, press the "**ENTER**" button and use the "**UP**" and "**DOWN**" buttons to show "**Display Settings**" on the LCD display. Press the "**ENTER**" button and use the "**UP**" and "**DOWN**" buttons to select "**Backlight**".Press the "**ENTER**" button and use the "**UP**" and "**DOWN**" buttons to select between "**Off**" and "**On**". Press the "**ENTER**" button to confirm the setting.

Display invert:

To access the display invert setting, press the "**ENTER**" button and use the "**UP**" and "**DOWN**" buttons to show "**Display Settings**" on the LCD display. Press the "**ENTER**" button and use the "**UP**" and "**DOWN**" buttons to select "**Invert**".Press the "**ENTER**" button and use the "**UP**" and "**DOWN**" buttons to select between "**No**" and "**Yes**". Press the "**ENTER**" button to confirm the setting.

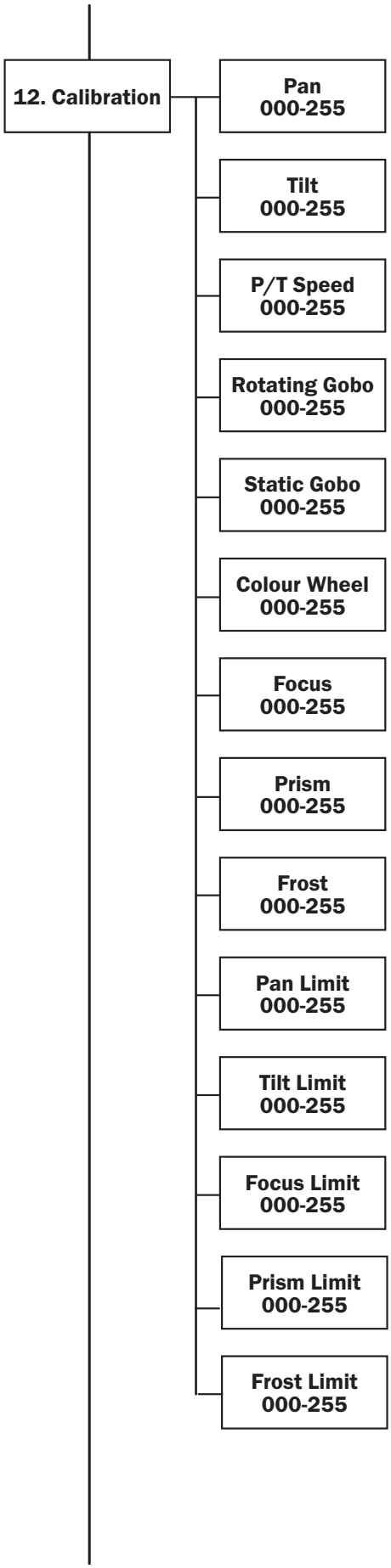

Calibration:

Calibration settings for the fixture.

To access the units calibration menu press the "**ENTER**" button and use the "**UP**" and "**DOWN**" buttons to show "**Calibration**". Press the "**ENTER**" button and use the "**UP**" and "**DOWN**" buttons to select the various options. Press the "**ENTER**" button and use the "**UP**" and "**DOWN**" buttons to select between "**000**" - "**255**".
Press the "**ENTER**" button to confirm the setting.

Please note: Calibration settings are set when the fixture is manufactured. This can be changed manually for home position adjustment. Performing a factory reset will not change these settings.

Descriptions:

Pan - Pan Fine Adjustment

Tilt - Tilt Fine Adjustment

P/T Speed - Pan/Tilt Speed Adjustment

Rotating Gobo - Rotating Gobo Fine Adjustment

Static Gobo - Static Gobo Fine Adjustment

Colour Wheel - Colour Wheel Fine Adjustment

Focus Focus - Fine Adjustment

Prism Prism - Fine Adjustment

Frost Frost - Fine Adjustment

Pan Limit - Pan Start/End Point Adjustment

Tilt Limit - Tilt Start/End Point Adjustment

Focus Limit - Focus Start/End Point Adjustment

Prism Limit - Prism Start/End Point Adjustment

Frost Limit - Frost Start/End Point Adjustment

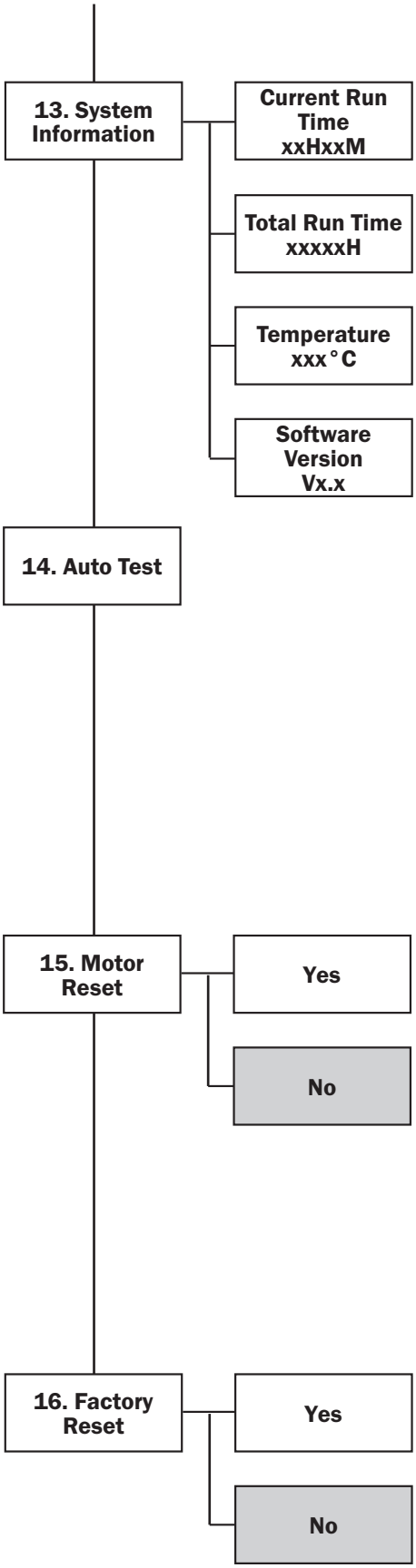

System information:

To display the fixtures system information, press the "**ENTER**" button and use the "**UP**" and "**DOWN**" buttons to show "**System Information**" on the LCD display The unit will now display the fixtures current run time, total run time, temperature and software version.

Auto test:

Tests all functions and motors in the fixture.

To access the auto test mode, press the "**ENTER**" button and use the "**UP**" and "**DOWN**" buttons to show "**Auto Test**" on the LCD display. Press the "**ENTER**" button and the fixture will initiate auto test.

Please note: Auto test will automatically stop when exiting the auto test menu.

Motor reset:

Resets all the fixtures motors.

To access the motor reset setting, press the "**ENTER**" button and use the "**UP**" and "**DOWN**" buttons to show "**Motor Reset**" on the LCD display. Press the "**ENTER**" button and use the "**UP**" and "**DOWN**" buttons to select between "**Yes**" and "**No**". Press the "**ENTER**" button to perform the motor reset when yes is selected.

Factory Reset:

Resets all the fixtures factory settings.

To access the factory setting reset, press the "**ENTER**" button and use the "**UP**" and "**DOWN**" buttons to show "**Factory Reset**" on the LCD display. Press the "**ENTER**" button and use the "**UP**" and "**DOWN**" buttons to select between "**Yes**" and "**No**". Press the "**ENTER**" button to perform the factory reset when yes is selected.

2 channel mode:

Channel	Value	Function
CH1	000-015	No function
	016-075	Show 1
	076-135	Show 2
	136-195	Show 3
	196-255	Show 4
CH2	000	Auto
	001-255	Sound sensitivity (low-high)

14 channel mode:

Channel	Value	Function
CH1	000-255	Pan adjustment 0-540°
CH2	000-255	Tilt adjustment 0-270°
CH3	000-255	Pan/tilt speed
CH4	000-255	Master dimmer (0-100%)
CH5	000-004	LED off
	005-250	Strobe (slow-fast)
	251-255	LED on
CH6	000-004	Open (white)
	005-013	Split colour (Open/Red)
	014-022	Red
	023-031	Split colour (Red/Orange)
	032-040	Orange
	041-049	Split colour (Orange/Green)
	050-058	Green
	059-067	Split colour (Green/Blue)
	068-076	Blue
	077-085	Split colour (Blue/Yellow)
	086-094	Yellow
	095-103	Split colour (Yellow/Cyan)
	104-112	Cyan
	113-121	Split colour (Cyan/Magenta)
	122-130	Magenta
	131-139	Open (white)
	140-195	Colour scroll CW (fast-slow)
	196-199	Colour scroll stop
	200-255	Colour scroll CCW (slow-fast)
CH7	000-007	Open
	008-017	Gobo 1
	018-027	Gobo 2
	028-037	Gobo 3
	038-047	Gobo 4
	048-059	Gobo 5
	060-067	Gobo 6
	068-077	Gobo 7

14 channel mode (cont.):

Channel	Value	Function
CH7 (cont.)	078-087	Gobo 1 shake (slow-fast)
	088-097	Gobo 2 shake (slow-fast)
	098-107	Gobo 3 shake (slow-fast)
	108-117	Gobo 4 shake (slow-fast)
	118-127	Gobo 5 shake (slow-fast)
	128-137	Gobo 6 shake (slow-fast)
	138-147	Gobo 7 shake (slow-fast)
	148-199	Gobo wheel scroll CCW (fast-slow)
	200-230	Gobo scroll stop
	231-255	Gobo wheel scroll CW (slow-fast)
CH8	000-007	Open
	008-017	Rotating gobo 1
	018-027	Rotating gobo 2
	028-037	Rotating gobo 3
	038-047	Rotating gobo 4
	048-059	Rotating gobo 5
	060-067	Rotating gobo 6
	068-077	Rotating gobo 1 shake (slow-fast)
	078-087	Rotating gobo 2 shake (slow-fast)
	088-097	Rotating gobo 3 shake (slow-fast)
	098-107	Rotating gobo 4 shake (slow-fast)
	108-117	Rotating gobo 5 shake (slow-fast)
	118-127	Rotating gobo 6 shake (slow-fast)
	128-187	Gobo wheel scroll CCW (fast-slow)
	188-193	Gobo scroll stop
	294-255	Gobo wheel scroll CW (slow-fast)

Channel	Value	Function
CH9	000-007	No function
	008-129	Gobo rotation CCW (fast-slow)
	130-133	No function
	134-255	Gobo rotation CW (slow-fast)
CH10	000-255	Focus
CH11	000-007	No function
	008-255	Frost
CH12	000-007	No function
	00-255	Prism
CH13	000-007	No function
	008-129	Prism rotation CCW (fast-slow)
	130-133	No function
	134-255	Prism rotation CW (slow-fast)
CH14	000-040	No function
	041-060	Enable BL/O whilst P/T
	061-080	Disable BL/O whilst P/T
	081-100	Enable BL/O whilst colour change
	101-120	Disable BL/O whilst colour change
	121-140	Enable BL/O whilst gobo change
	141-160	Disable BL/O whilst gobo change
	161-180	Enable BL/O whilst P/T, colour change & gobo change
	181-200	Disable BL/O whilst P/T, colour change & gobo change
	201-240	No function
	241-255	Motor reset (hold 3s)

18 channel mode:

Channel	Value	Function
CH1	000-255	Pan adjustment 0-540°
CH2	000-255	Pan fine adjustment
CH3	000-255	Tilt adjustment 0-270°
CH4	000-255	Tilt fine adjustment
CH5	000-255	Pan/tilt speed
CH6	000-255	Master dimmer (0-100%)
CH7	000-004	LED off
	005-250	Strobe (slow-fast)
	251-255	LED on
CH8	000-004	Open (white)
	005-013	Split colour (Open/Red)
	014-022	Red
	023-031	Split colour (Red/Orange)
	032-040	Orange
	041-049	Split colour (Orange/Green)
	050-058	Green
	059-067	Split colour (Green/Blue)
	068-076	Blue
	077-085	Split colour (Blue/Yellow)
	086-094	Yellow
	095-103	Split colour (Yellow/Cyan)
	104-112	Cyan
	113-121	Split colour (Cyan/Magenta)
	122-130	Magenta
	131-139	Open (white)
	140-195	Colour scroll CW (fast-slow)
	196-199	Colour scroll stop
	200-255	Colour scroll CCW (slow-fast)
CH9	000-007	Open
	008-017	Gobo 1
	018-027	Gobo 2
	028-037	Gobo 3
	038-047	Gobo 4
	048-059	Gobo 5
	060-067	Gobo 6
	068-077	Gobo 7

Channel	Value	Function
CH9 (cont.)	078-087	Gobo 1 shake (slow-fast)
	088-097	Gobo 2 shake (slow-fast)
	098-107	Gobo 3 shake (slow-fast)
	108-117	Gobo 4 shake (slow-fast)
	118-127	Gobo 5 shake (slow-fast)
	128-137	Gobo 6 shake (slow-fast)
	138-147	Gobo 7 shake (slow-fast)
	148-199	Gobo wheel scroll CCW (fast-slow)
	200-230	Gobo scroll stop
	231-255	Gobo wheel scroll CW (slow-fast)
CH10	000-007	Open
	008-017	Rotating gobo 1
	018-027	Rotating gobo 2
	028-037	Rotating gobo 3
	038-047	Rotating gobo 4
	048-059	Rotating gobo 5
	060-067	Rotating gobo 6
	068-077	Rotating gobo 1 shake (slow-fast)
	078-087	Rotating gobo 2 shake (slow-fast)
	088-097	Rotating gobo 3 shake (slow-fast)
	098-107	Rotating gobo 4 shake (slow-fast)
	108-117	Rotating gobo 5 shake (slow-fast)
	118-127	Rotating gobo 6 shake (slow-fast)
	128-187	Gobo wheel scroll CCW (fast-slow)
	188-193	Gobo scroll stop
	194-255	Gobo wheel scroll CW (slow-fast)

18 channel mode (cont.):

Channel	Value	Function
CH11	000-007	No function
	008-129	Gobo rotation CCW (fast-slow)
	130-133	No function
	134-255	Gobo rotation CW (slow-fast)
CH12	000-255	Focus
CH13	000-007	No function
	008-255	Frost
CH14	000-007	No function
	008-099	Prism
CH15	000-007	No function
	008-129	Prism rotation CCW (fast-slow)
	130-133	No function
	134-255	Prism rotation CW (slow-fast)
CH16	000-015	No function
	016-075	Show 1
	076-135	Show 2
	136-195	Show 3
	196-255	Show 4 (forward facing show)
CH17	000	Auto (when it show mode)
	001-255	Sound sensitivity (low-high) (when in show mode)
CH18	000-040	No function
	041-060	Enable BL/O whilst P/T
	061-080	Disable BL/O whilst P/T
	081-100	Enable BL/O whilst colour change
	101-120	Disable BL/O whilst colour change
	121-140	Enable BL/O whilst gobo change
	141-160	Disable BL/O whilst gobo change
	161-180	Enable BL/O whilst P/T, colour change & gobo change
	181-200	Disable BL/O whilst P/T, colour change & gobo change
	201-240	No function
	241-255	Motor reset (hold 3s)

Static Gobos:

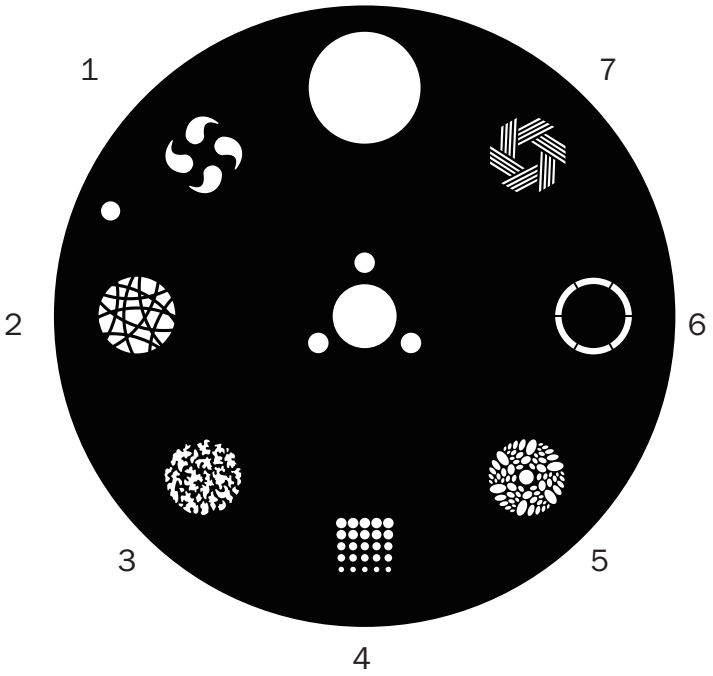

Colour Wheel:

Rotating gobos:

Gobo size: 22mmØ Image size: 16mmØ
Gobo thickness: 0.4mm

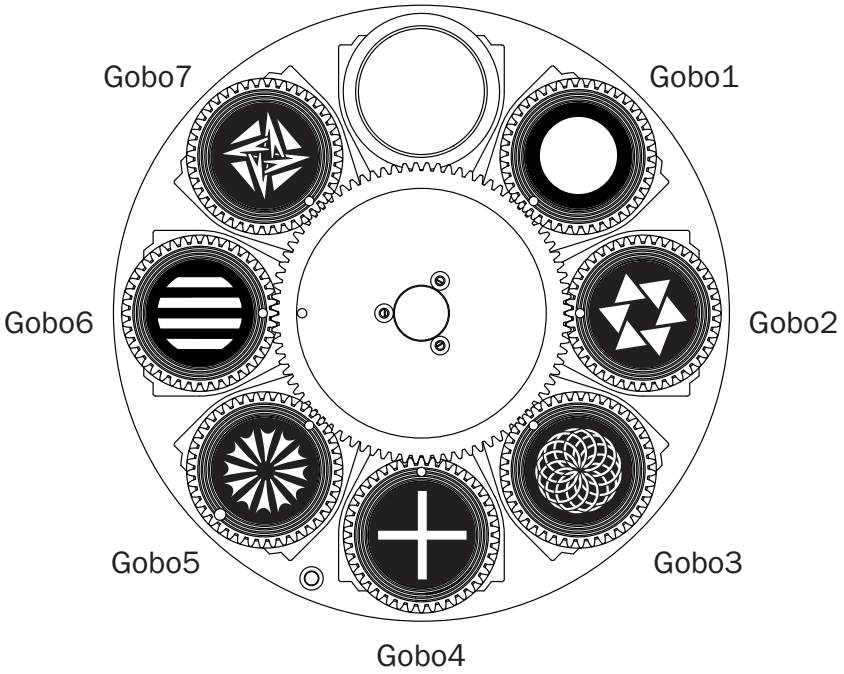

Setting the DMX address:

The DMX mode enables the use of a universal DMX controller. Each fixture requires a “start address” from 1- 512. A fixture requiring one or more channels for control begins to read the data on the channel indicated by the start address. For example, a fixture that occupies or uses 7 channels of DMX and was addressed to start on DMX channel 100, would read data from channels: 100, 101, 102, 103, 104, 105 and 106. Choose a start address so that the channels used do not overlap. E.g. the next unit in the chain starts at 107.

DMX 512:

DMX (Digital Multiplex) is a universal protocol used as a form of communication between intelligent fixtures and controllers. A DMX controller sends DMX data instructions form the controller to the fixture. DMX data is sent as serial data that travels from fixture to fixture via the DATA “IN” and DATA “OUT” XLR terminals located on all DMX fixtures (most controllers only have a data “out” terminal).

DMX linking:

DMX is a language allowing all makes and models of different manufactures to be linked together and operate from a single controller, as long as all fixtures and the controller are DMX compliant. To ensure proper DMX data transmission, when using several DMX fixtures try to use the shortest cable path possible. The order in which fixtures are connected in a DMX line does not influence the DMX addressing. For example; a fixture assigned to a DMX address of 1 may be placed anywhere in a DMX line, at the beginning, at the end, or anywhere in the middle. When a fixture is assigned a DMX address of 1, the DMX controller knows to send DATA assigned to address 1 to that unit, no matter where it is located in the DMX chain.

DATA cable (DMX cable) requirements (for DMX operation):

This fixture can be controlled via DMX-512 protocol. The DMX address is set on the back of the unit. Your unit requires either a standard 3-pin or 5-pin XLR connector for data input/output, see images below.

Further DMX cables can be purchased from all good sound and lighting suppliers or Prolight Concepts dealers.

Please quote:	3-Pin:	**CABL10 – 2m**	**CABL11 – 5m**	**CABL12 – 10m**
	5-Pin:	**CABL185 – 2m**	**CABL187 – 5m**	**CABL188 – 10m**

Also remember that DMX cable must be daisy chained and cannot be split.

Notice:

Be sure to follow the diagrams below when making your own cables. Do not connect the cables shield conductor to the ground lug or allow the shield conductor to come in contact with the XLRs outer casing. Grounding the shield could cause a short circuit and erratic behaviour.

Pin Configuration	
3-Pin	5-Pin
Pin 1 - Ground	
Pin 2 - Negative	
Pin 3 - Positive	
–	Pin 4 - N/C
–	Pin 5 - N/C

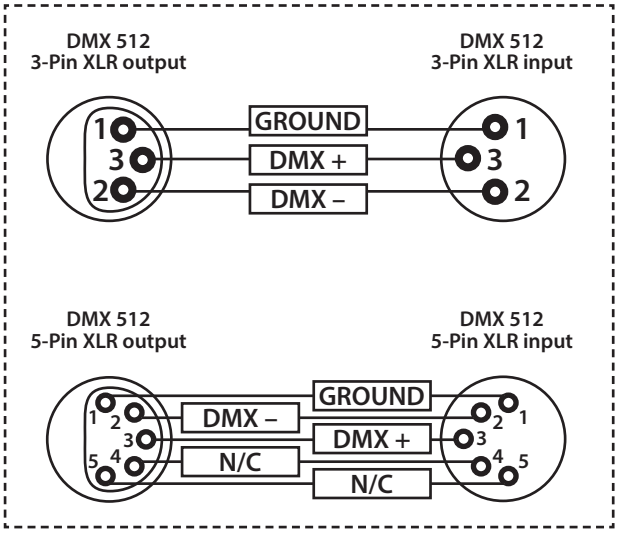

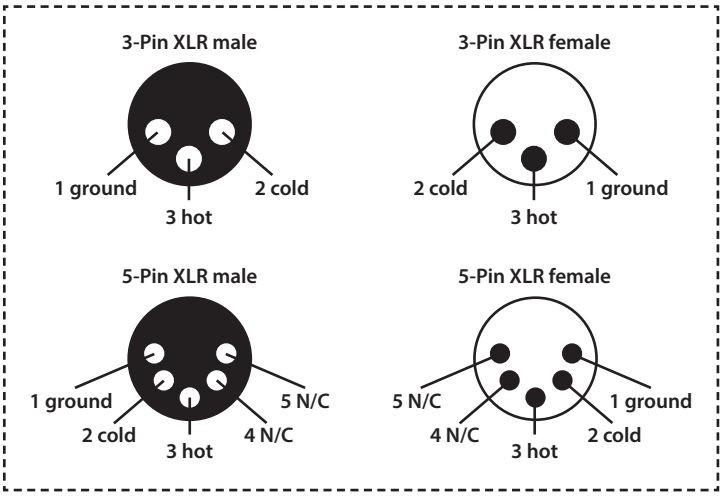

Line termination:

When longer runs of cable are used, you may need to use a terminator on the last unit to avoid erratic behaviour.

Using a cable terminator will decrease the possibilities of erratic behaviour. (3-pin - Order ref: CABL90, 5-pin - Order ref: CABL89)

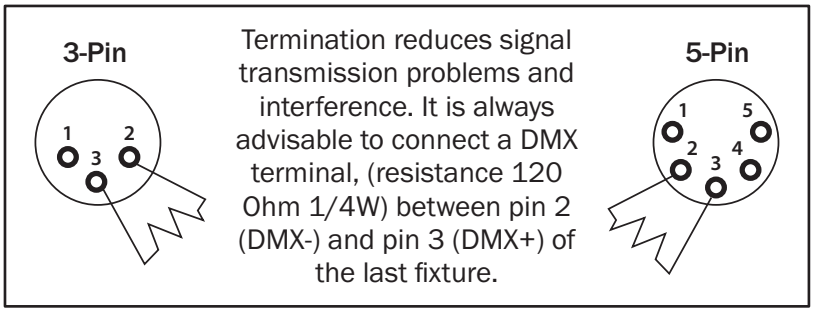

Termination reduces signal transmission problems and interference. It is always advisable to connect a DMX terminal, (resistance 120 Ohm 1/4W) between pin 2 (DMX-) and pin 3 (DMX+) of the last fixture.

5-pin XLR DMX connectors:

Some manufactures use 5-pin XLR connectors for data transmission in place of 3-pin. 5-pin XLR fixtures may be implemented in a 3-pin XLR DMX line. When inserting standard 5-pin XLR connectors in to a 3-pin line a cable adaptor must be used. The diagram below details the correct cable conversion.

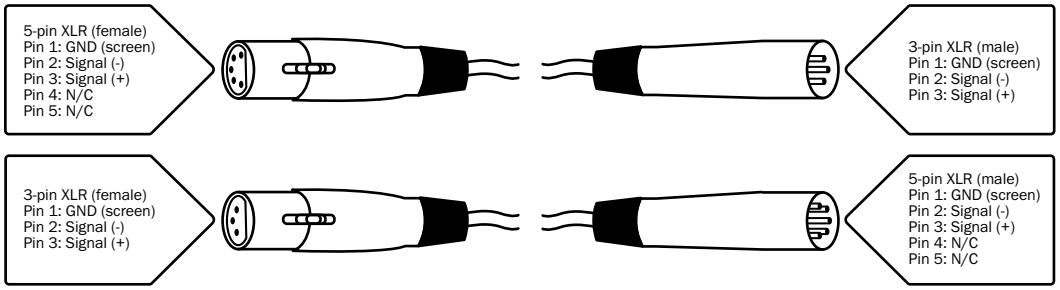

Power linking:

This fixture provides power linking via the power output on the rear allowing multiple units to be connected together. The maximum number of fixtures that can be connected is 8 fixtures @ 240V or 4 fixtures @ 120V (including the first fixture). After the maximum number of fixtures are connected a new power run will need to be started.

Please note: Caution should be used when power linking other fixtures to the Fusion 150 Spot as the power consumption of other fixtures will vary. Fixtures fitted with lamps often require 2/3 times more current on startup, these may require their own power source.

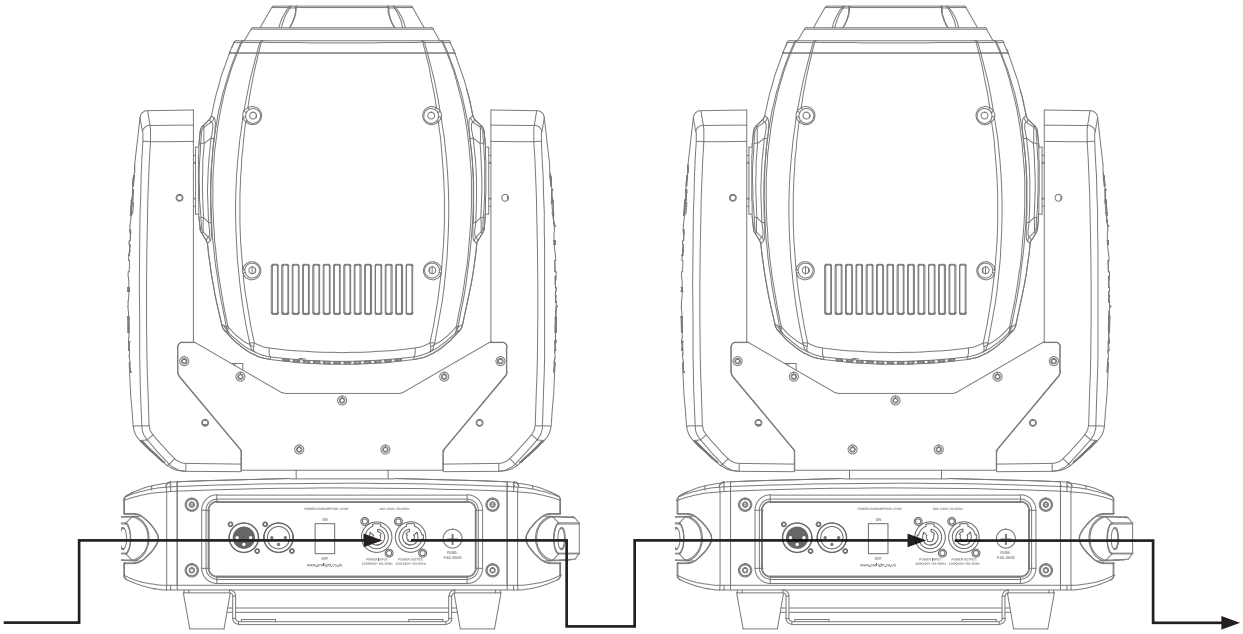

Correct Disposal of this Product (Waste Electrical & Electronic Equipment)

(Applicable in the European Union and other European countries with separate collection systems)

This marking shown on the product or its literature, indicates that it should not be disposed with other household wastes at the end of its working life. To prevent possible harm to the environment or human health from uncontrolled waste disposal, please separate this from other types of wastes and recycle it responsibly to promote the sustainable reuse of material resources.

Household users should contact either the retailer where they purchased this product, or their local government office, for details of where and how they can take this item for environmentally safe recycling.

Business users should contact their supplier and check the terms and conditions of the purchase contract. This product should not be mixed with other commercial wastes for disposal.

EQUINOX