EQUINOX

Interceptor XP

User Manual

Order code: EQLED451

WARNING

FOR YOUR OWN SAFETY, PLEASE READ THIS USER MANUAL CAREFULLY BEFORE YOUR INITIAL START-UP!

- Before your initial start-up, please make sure that there is no damage caused during transportation.
- Should there be any damage, consult your dealer and do not use the equipment.
- To maintain the equipment in good working condition and to ensure safe operation, it is necessary for the user to follow the safety instructions and warning notes written in this manual.
- Please note that damages caused by user modifications to this equipment are not subject to warranty.

CAUTION!
KEEP THIS EQUIPMENT AWAY FROM RAIN, MOISTURE AND LIQUIDS

CAUTION!
TAKE CARE USING THIS EQUIPMENT!
HIGH VOLTAGE-RISK OF ELECTRIC SHOCK!!

CAUTION!
LASER LIGHT - AVOID DIRECT EYE EXPOSURE
CLASS 3B LASER

IMPORTANT:

The manufacturer will not accept liability for any resulting damages caused by the non-observance of this manual or any unauthorised modification to the equipment.

- Never let the power cable come into contact with other cables. Handle the power cable and all mains voltage connections with particular caution!
- Never remove warning or informative labels from the unit.
- Do not open the equipment and do not modify the unit.
- Do not connect this equipment to a dimmer pack.
- Do not switch the equipment on and off in short intervals, as this will reduce the system's life.
- Only use the equipment indoors.
- Do not expose to flammable sources, liquids or gases.
- Always disconnect the power from the mains when equipment is not in use or before cleaning! Only handle the power-cable by the plug. Never pull out the plug by pulling the power-cable.
- Make sure that the available mains supply voltage is between 100~240V AC, 50/60Hz.
- Make sure that the power cable is never crimped or damaged. Check the equipment and the power cable periodically.
- If the equipment is dropped or damaged, disconnect the mains power supply immediately and have a qualified engineer inspect the equipment before operating again.
- If the equipment has been exposed to drastic temperature fluctuation (e.g. after transportation), do not connect power or switch it on immediately. The arising condensation might damage the equipment. Leave the equipment switched off until it has reached room temperature.
- If your product fails to function correctly, stop use immediately. Pack the unit securely (preferably in the original packing material), and return it to your Pro Light dealer for service.
- Only use fuses of same type and rating.
- Repairs, servicing and power connection must only be carried out by a qualified technician. THIS UNIT CONTAINS NO USER SERVICEABLE PARTS.
- This lighting fixture is for professional use only - it is not designed for or suitable for household use. The product must be installed by a qualified technician in accordance with local territory regulations. The safety of the installation is the responsibility of the installer. The fixture presents risks of severe injury or death due to fire hazards, electric shock and falls.
- Warning! Risk Group 2 LED product according to EN 62471. Do not view the light output with optical instruments or any device that may concentrate the beam.
- WARRANTY: One year from date of purchase.

OPERATING DETERMINATIONS

If this equipment is operated in any other way, than those described in this manual, the product may suffer damage and the warranty becomes void. Incorrect operation may lead to danger e.g: short-circuit, burns and electric shocks etc.

Do not endanger your own safety and the safety of others!

Incorrect installation or use can cause serious damage to people and/or property.

Please note: These fixtures are intended for stage lighting and entertainment applications only, and are not intended for extended periods of use, including but not limited to house-light, industrial or architectural applications and should only be operated with short duty cycles.

Proper Usage

This product is for overhead use only. For safety purposes, we recommend mounting lighting effect products with lasers, on level surfaces or sturdy overhead supports using suitable hanging clamps and safety cables.
Please contact us for more information on appropriate mounting hardware.

International laser safety regulations state that laser products must be operated as per the example below; with a minimum of 3m (9.8ft) vertical distance between the floor and the lowest laser.
Additionally, 3m of horizontal distance is required between laser and the audience or other surroundings.

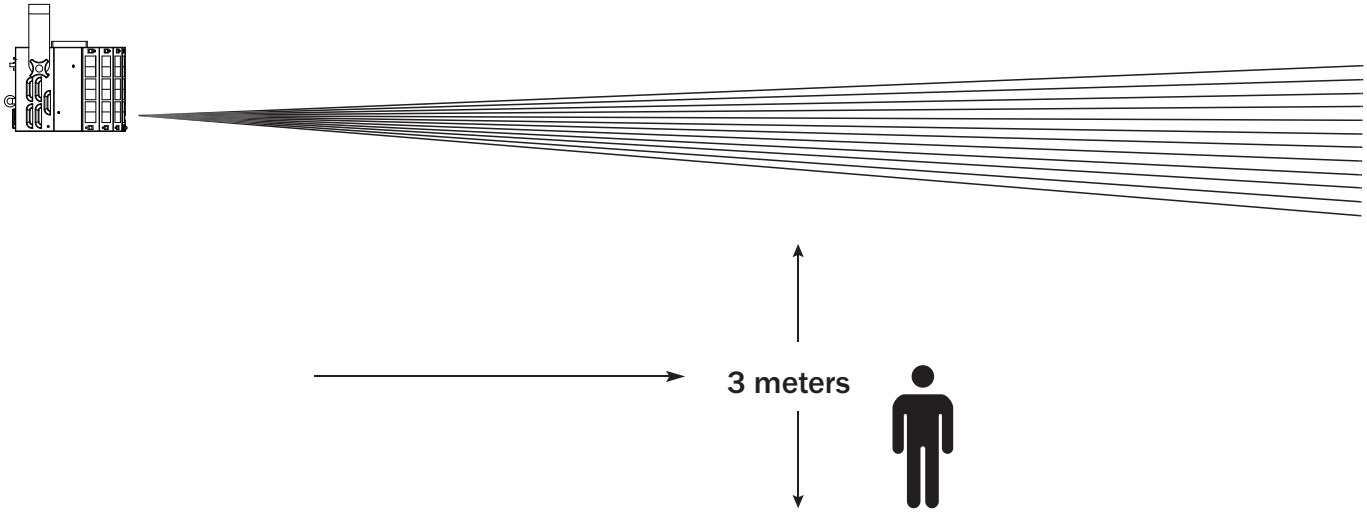

CAUTION: Laser radiation

Avoid pointing directly towards eyes. Laser output can cause injury if viewed directly. This product is a Class 3B laser and should only be installed and used by persons who are trained in the management of laser radiation and are able to operate in accordance with the guidance given by the Health and Safety Executive (HSE) in “The Safety of Laser Lighting Displays”. Information on this guidance can be found on the following website: https://www.hse.gov.uk/pubns/indg224.htm

Interceptor XP

The Interceptor XP is a 3-in-1 effect covering areas in multicoloured, widely dispersed beams of light that rotate and twist at varying speeds via its 48 lenses. Further bolstering this fixtures offering is a red/green laser source and 16 x 0.5W RGB LEDs to provide strobe effects. Built-in shows can be accessed via the menu or handy IR remote, allowing the user to simply plug and play. Different DMX modes allow for further individual control of effects and W DMX USB compatibility is on-board for wireless convenience.

- Derby: 4 x 7W five-colour LEDs (RGBWA)
- Strobe: 16 x 0.5W tri-colour 5050 SMD LEDs (RGB)
- Laser: 650nm/100mW (red) laser diode, 532nm/30mW (green) laser diode
- Coverage angle: 118°
- DMX channels: 2 or 9 selectable
- W DMX USB compatibility for wireless DMX control
- Auto, sound active and primary/secondary modes
- 0 - 100% dimming
- Variable strobe
- Supplied with hanging bracket
- 4 button menu with LED display
- IEC power input
- 3-Pin XLR input/output
- Fan cooled
- Supplied with IR remote

Specifications	
Power consumption	46W
Power supply	100-240V, 50/60Hz
Fuse	T1A 250V
Dimensions	215 x 201 x 205mm
Weight	1.8kg
Order code	EQLED451

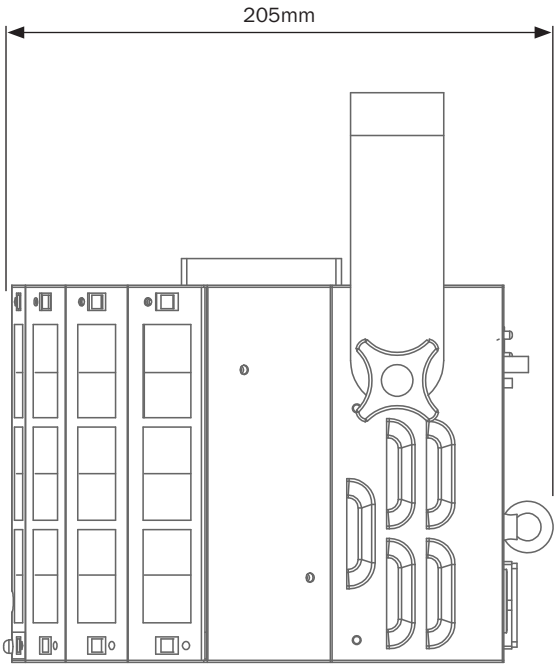

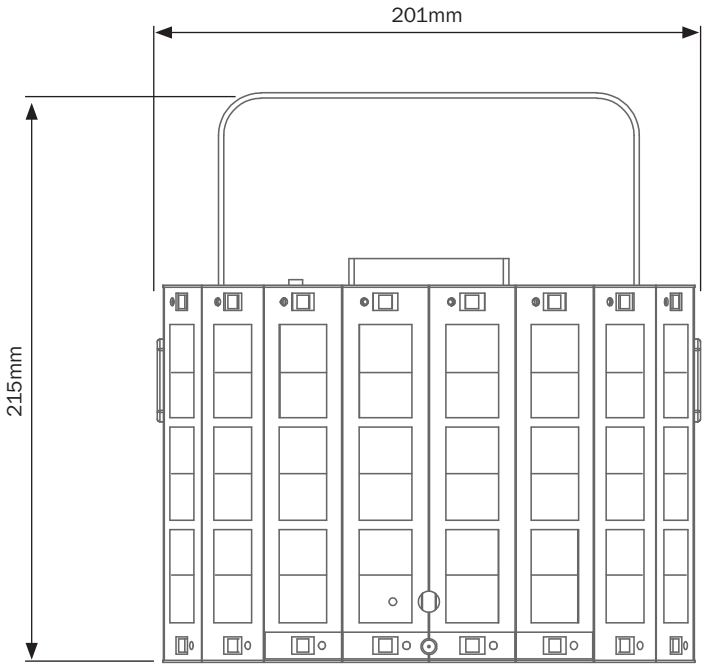

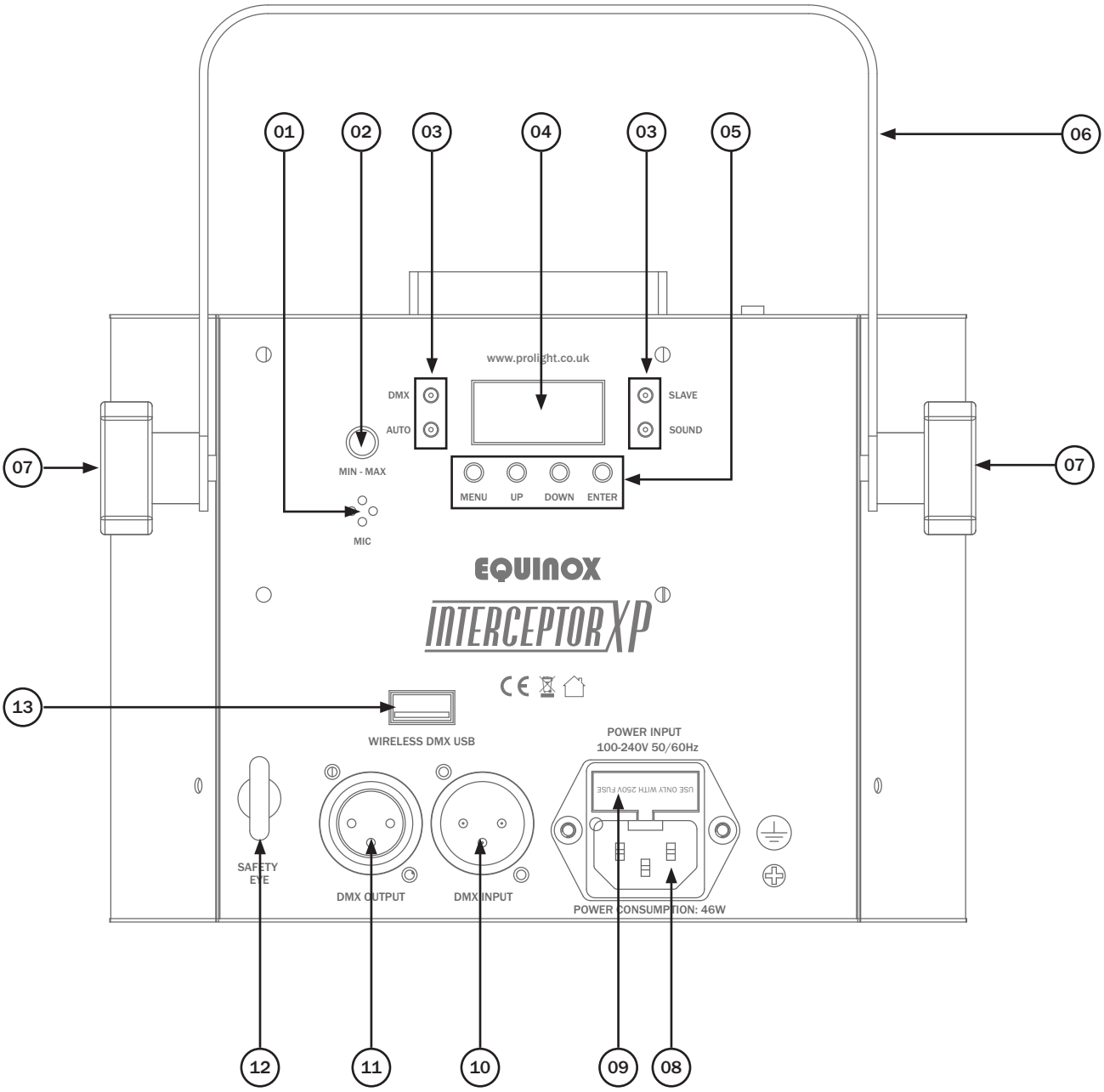

01 - Microphone
02 - Microphone sensitivity potentiometer
03 - Mode indicators
04 - LED Display
05 - Function buttons
06 - Hanging bracket
07 - Bracket adjustment knobs
08 - IEC power input
09 - Fuse T1A 250V
10 - 3-Pin DMX input
11 - 3-Pin DMX output
12 - Safety eye
13 - Wireless DMX USB port

In the box: **1 x fixture, 1 x power cable, & 1 x IR remote**

Installation:

1. Align and insert the clamp into the hole in the bracket and tighten the bolt.
2. Mount the fixture onto your truss system via the clamps and tighten to ensure that it's secure.
3. Pull the safety cable through the safety cable hole located on the back of the fixture and around the truss.

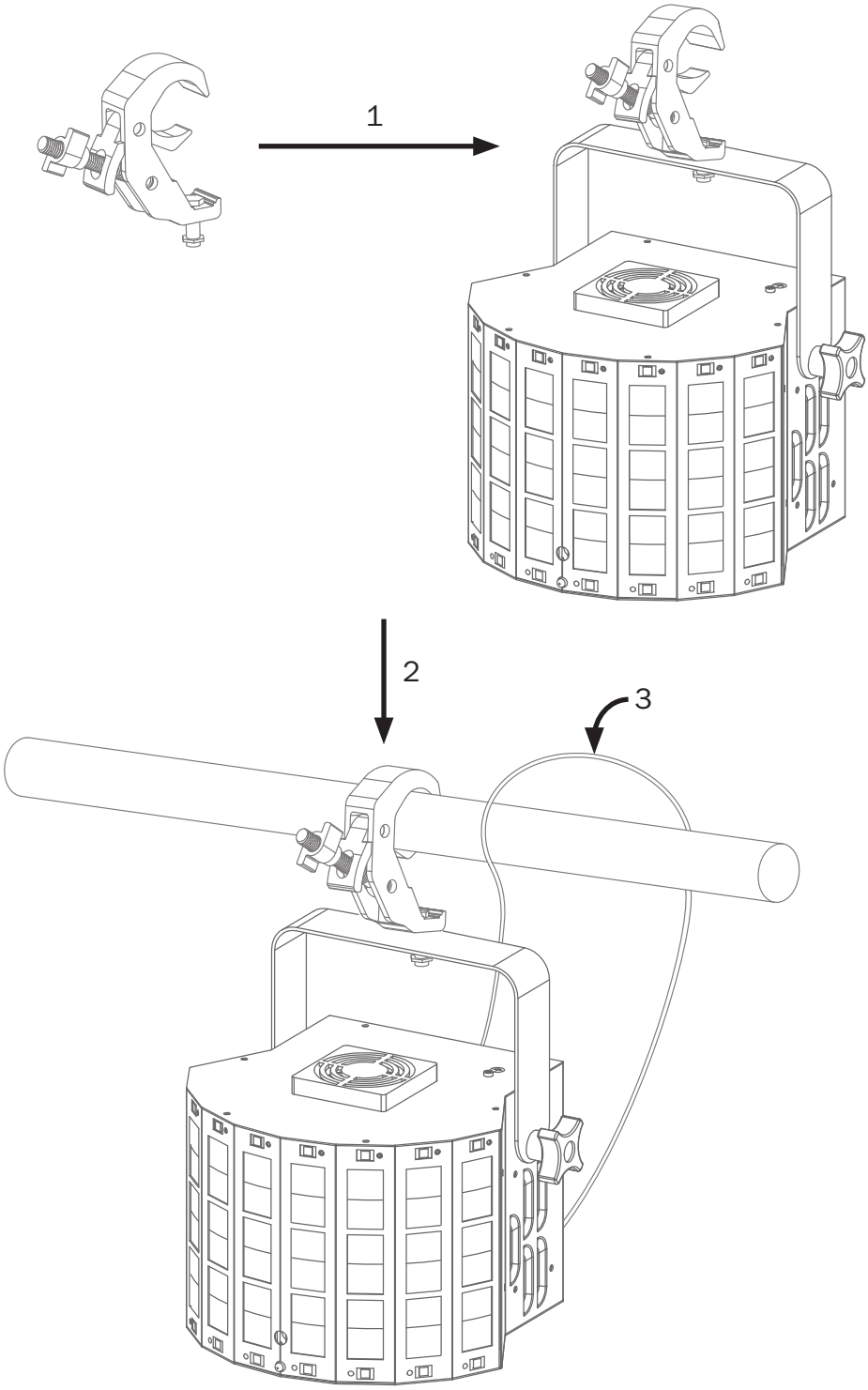

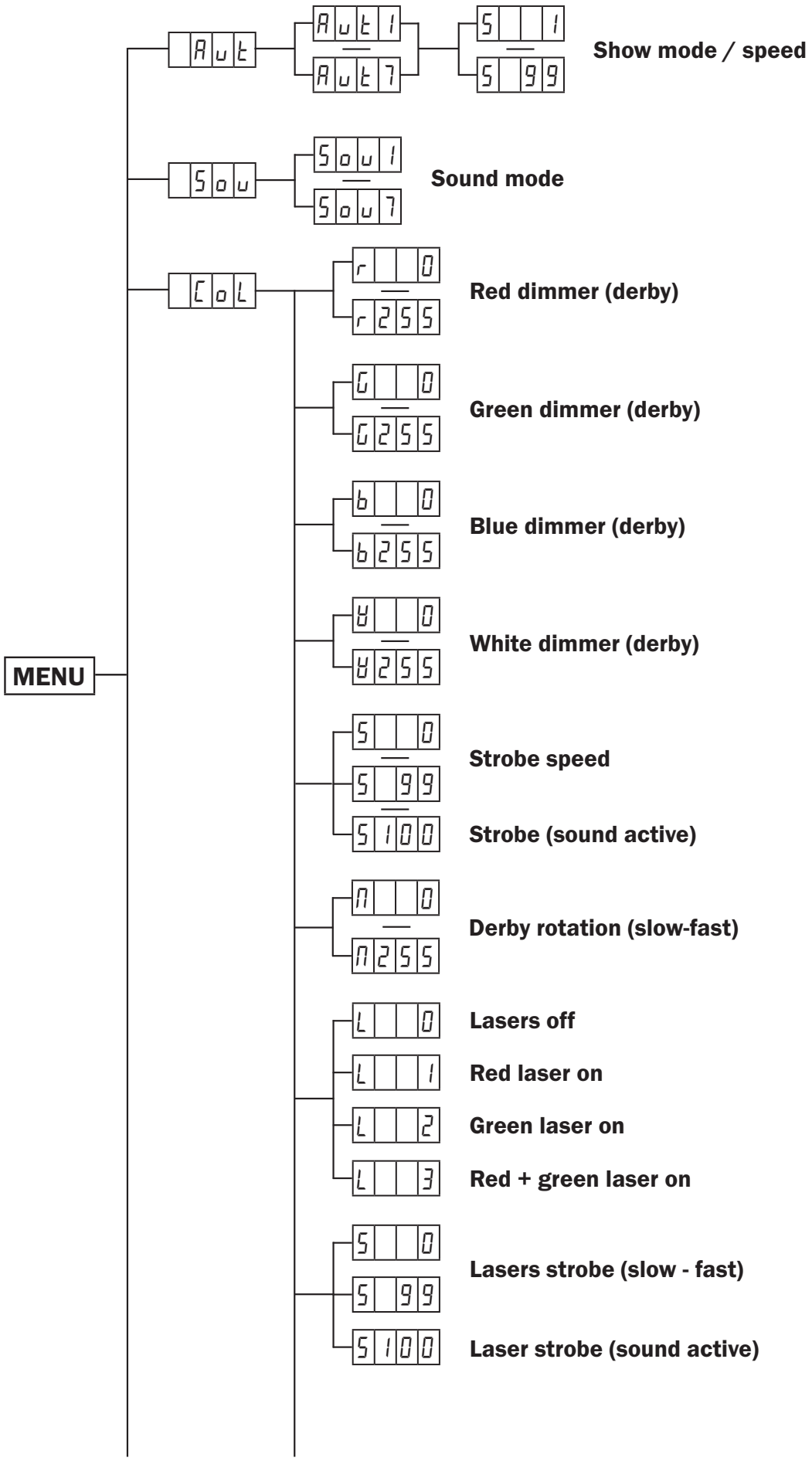
MENU
Aut
Aut1
Aut7
S 1
S 99
Show mode / speed
Sou
Sou1
Sou7
Sound mode
CoL
r 0
r255
Red dimmer (derby)
G 0
G255
Green dimmer (derby)
b 0
b255
Blue dimmer (derby)
W 0
W255
White dimmer (derby)
S 0
S 99
Strobe speed
S100
Strobe (sound active)
n 0
n255
Derby rotation (slow-fast)
L 0
Lasers off
L 1
Red laser on
L 2
Green laser on
L 3
Red + green laser on
S 0
S 99
Lasers strobe (slow - fast)
S100
Laser strobe (sound active)

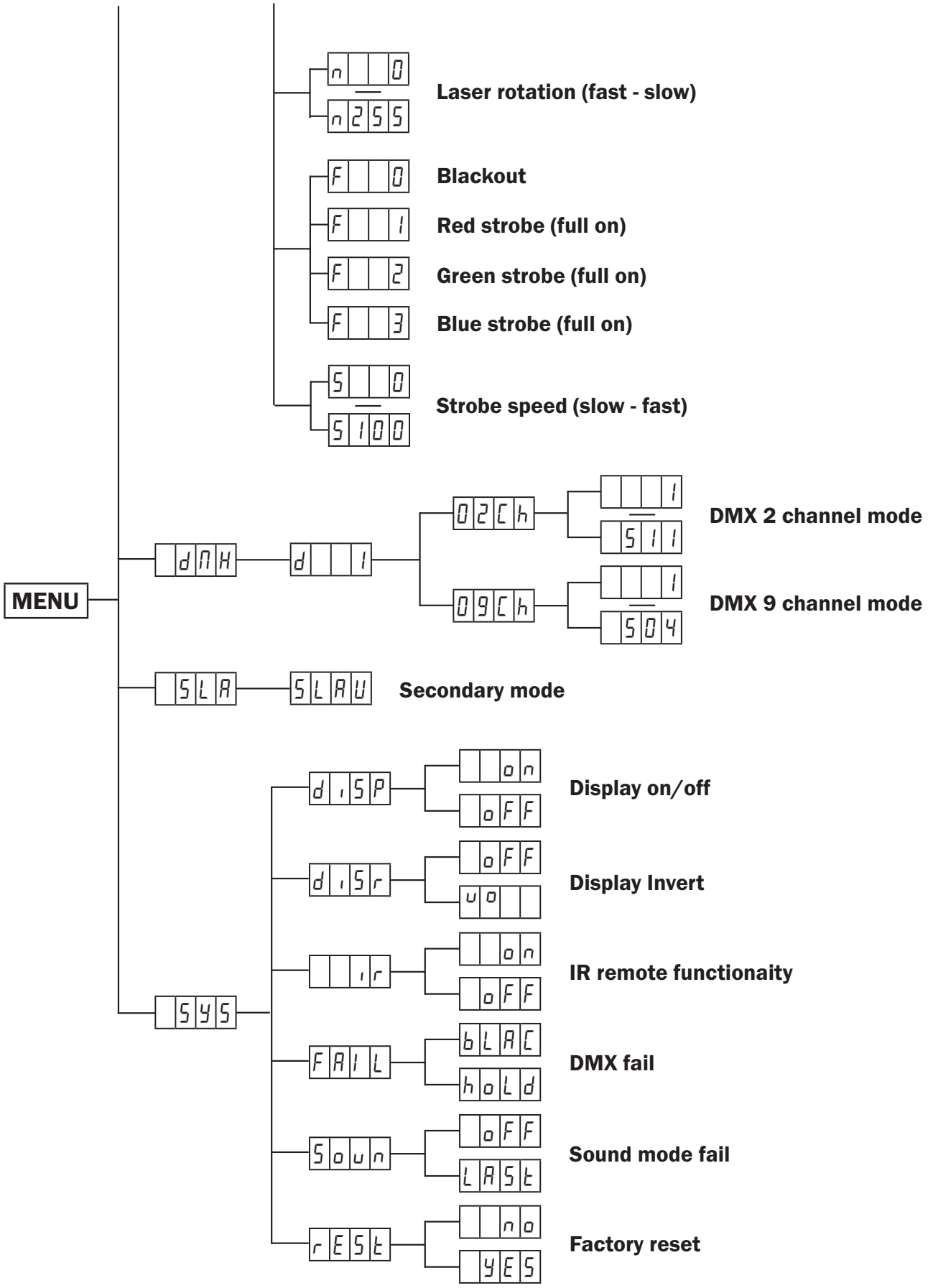
MENU
n 0
n255
Laser rotation (fast - slow)
F 0
Blackout
F 1
Red strobe (full on)
F 2
Green strobe (full on)
F 3
Blue strobe (full on)
S 0
S100
Strobe speed (slow - fast)
dMX
d 1
02Ch
1
511
DMX 2 channel mode
09Ch
1
504
DMX 9 channel mode
SLA
SLAU
Secondary mode
SYS
disP
on
oFF
Display on/off
disr
oFF
uo
Display Invert
ir
on
oFF
IR remote functionaity
FAIL
bLAC
hoLd
DMX fail
Soun
oFF
LASt
Sound mode fail
rESt
no
YES
Factory reset

DMX mode:

Operating in a DMX control mode environment gives the user the greatest flexibility when it comes to customising or creating a show. In this mode you will be able to control each individual trait of the fixture and each fixture independently.

To access the DMX mode, press the "**MENU**" button on the rear of the unit to show dMH on the LED display. Now press the "**ENTER**" button twice and use the "**UP**" and "**DOWN**" buttons to choose either 2 or 9 channel mode. Press the "**ENTER**" button to confirm the setting then use the "**UP**" and "**DOWN**" buttons to set the required DMX address.
Press the "**ENTER**" button to confirm the setting.

To exit out of any of the above options, press the "**MENU**" button.

2 channel mode:

Channel	Value	Function
CH1	000-009	No function
	010-044	Show 1 (Derby, strobe and laser)
	045-079	Show 2 (Derby and strobe)
	080-114	Show 3 (Derby and laser)
	115-149	Show 4 (Strobe and laser)
	150-184	Show 5 (Derby)
	185-219	Show 6 (Strobe)
	220-255	Show 7 (Laser)
CH2	000-255	Speed (slow-fast)

9 channel mode:

Channel	Value	Function	
CH1	000-009	No function	
	010-044	Show 1 (Derby, strobe and laser)	
	045-079	Show 2 (Derby and strobe)	
	080-114	Show 3 (Derby and laser)	
	115-149	Show 4 (Strobe and laser)	
	150-184	Show 5 (Derby)	
	185-219	Show 6 (Strobe)	
	220-255	Show 7 (Laser)	
CH2	000-255	Speed (slow-fast)	
CH3	000-005	No function	Derby
	006-020	Red	
	021-035	Green	
	036-050	Blue	
	051-065	White	
	066-080	Red + Green	
	081-095	Red + Blue	
	096-110	Red + White	
	111-125	Blue + Green	
	126-140	Green + White	
	141-155	Blue + White	
	156-170	Red + Green + Blue + White	
	171-185	Red + Green + White	
	186-200	Green + Blue + White	
	201-215	Red + Blue + Green	
	216-230	4 Colour Change (slow-fast)	
	231-255	14 Colour Change (slow-fast)	
CH4	000-005	No function	
	006-255	Strobe (slow-fast)	
CH5	000-127	Rotation (slow-fast)	
	128-255	Rotation (manual adjustment)	
CH6	000-009	No function	Strobe
	010-019	Red chase 1 (slow-fast)	
	020-029	Green chase 1 (slow-fast)	
	030-039	Blue chase 1 (slow-fast)	

Channel	Value	Function	
CH6 (cont.)	040-049	Red, green, blue chase 1 (slow-fast)	Strobe
	050-059	Red, green, blue chase 2 (slow-fast)	
	060-069	Red, green, blue chase 3 (slow-fast)	
	070-079	Red, green, blue chase 4 (slow-fast)	
	080-089	7 colour chase 1 (slow-fast)	
	090-099	7 colour chase 2 (slow-fast)	
	100-109	Red, green, blue chase 5 (slow-fast)	
	110-119	3 colour change RGB (slow-fast)	
	120-129	3 colour change CMY (slow-fast)	
	130-139	3 alternate colour change (slow-fast)	
	140-149	6 alternate colour change (slow-fast)	
	150-159	Red, green, blue chase 6 (slow-fast)	
	160-169	Red, green, blue chase 7 (slow-fast)	
	170-179	Red, green, blue chase 8 (slow-fast)	
	180-189	Red chase 2 (slow-fast)	
	190-199	Green chase 2 (slow-fast)	
	200-209	Blue chase 2 (slow-fast)	
	210-219	Red, green, blue chase 9 (slow-fast)	
	220-229	Red, green, blue chase 10 (slow-fast)	
	230-239	Red, green, blue chase 11 (slow-fast)	
	240-249	Red, green, blue chase 12 (slow-fast)	
	250-255	Red, green, blue chase 13 (slow-fast)	

9 channel mode (cont).

Channel	Value	Function	
CH7	000-009	No function	Laser
	010-049	Red	
	050-089	Green	
	090-129	Red + green	
	130-169	Red on, green strobe (CH8)	
	170-209	Green on, red strobe (CH8)	
	210-255	Red + green alternate strobe (CH8)	
CH8	000-009	No function	
	010-255	Strobe (slow-fast)	
CH9	000-004	No function	
	005-127	Rotation clockwise (slow-fast)	
	128-133	Rotation stop	
	134-255	Rotation anti-clockwise (slow-fast)	

Show mode:

To access the show modes, press the "**MENU**" button on the rear of the unit to show Aut on the LED display. Now press the "**ENTER**" button and use the "**UP**" and "**DOWN**" buttons to choose between Aut 1 ~ Aut 7. Now press the "**ENTER**" button and use the "**UP**" and "**DOWN**" buttons to set the speed between S 1 ~ S 99 (slow-fast). Press the "**ENTER**" button to confirm the setting.

To exit out of any of the above options, press the "**MENU**" button.

Sound mode:

To access the sound mode, press the "**MENU**" button on the rear of the unit to show Sou on the LED display. Now press the "**ENTER**" button and use the "**UP**" and "**DOWN**" buttons to choose between Sou 1 ~ Sou 7. Press the "**ENTER**" button to confirm the setting.

To adjust the sound sensitivity, turn the "MIN/MAX" dial on the rear of the unit

To exit out of any of the above options, press the "**MENU**" button.

Manual mode:

To access the manual modes, press the "**MENU**" button on the rear of the unit to show Col on the LED display. Now press the "**ENTER**" button to choose between the following settings:

r 0 ~ r255 **(Red dimmer - derby)**
G 0 ~ G255 **(Green dimmer - derby)**
b 0 ~ b255 **(Blue dimmer - derby)**
W 0 ~ W255 **(White dimmer - derby)**
S 0 ~ S 100 **(Strobe speed / strobe sound active)**
M 0 ~ M255 **(Derby rotation)**
L 0 ~ L 3 **(Lasers)**
S 0 ~ S 100 **(Lasers strobe speed / strobe sound active)**
M 0 ~ M255 **(Lasers rotation)**
F 0 ~ F 3 **(Strobe)**
S 0 ~ S 100 **(Strobe speed)**

To exit out of any of the above options, press the "**MENU**" button.

Secondary mode:

By default, the unit is set to primary. To set the other units in secondary mode, press the "**MENU**" button on the rear of the unit to show SLA on the LED display. Press the "**ENTER**" button to confirm the setting. The unit will now run in sequence with the primary unit.

To exit out of any of the above options, press the "**MENU**" button.

Display settings:

To access the display settings, press the "**MENU**" button on the rear of the unit to show SYS on the LED display. Now press the "**UP**" and "**DOWN**" buttons to show disP (**Backlight off**) or disr (**Display invert**). Press the "**ENTER**" button then press the "**UP**" and "**DOWN**" buttons to choose oFF or on. Press the "**ENTER**" button to confirm the setting.

To exit out of any of the above options, press the "**MENU**" button.

IR remote:

To set the unit to recieve IR remote instructions, press the "**MENU**" button on the rear of the unit to show SYS on the LED display. Now press the "**UP**" and "**DOWN**" buttons to show ir on the LED display. Press the "**ENTER**" button then choose oFF or on.
Press the "**ENTER**" button to confirm the setting.

To exit out of any of the above options, press the "**MENU**" button.

DMX fail:

To set the DMX fail function, press the "**MENU**" button on the rear of the unit to show SYS on the LED display. Now press the "**UP**" and "**DOWN**" buttons to show FAIL on the LED display. Press the "**ENTER**" button then choose BLAC (**Blackout**) or hoLd (**holds last setting**).
Press the "**ENTER**" button to confirm the setting.

To exit out of any of the above options, press the "**MENU**" button.

Sound fail:

To set the sound fail function, press the "**MENU**" button on the rear of the unit to show SYS on the LED display. Now press the "**UP**" and "**DOWN**" buttons to show Soun on the LED display. Press the "**ENTER**" button then choose oFF or LASt (**holds last setting**). Press the "**ENTER**" button to confirm the setting.

To exit out of any of the above options, press the "**MENU**" button.

Factory reset:

To reset the units factory settings, press the "**MENU**" button on the rear of the unit to show SYS on the LED display. Now press the "**ENTER**" button and use the "**UP**" and "**DOWN**" buttons to choose between YES (reset) or no. Press the "**ENTER**" button to confirm the setting.

To exit out of any of the above options, press the "**MENU**" button.

IR remote functions:

01 - Sets the unit into auto mode (press multiple times to cycle through the 7 auto modes)

02 - Sets the unit into sound mode (press multiple times to cycle through the 7 sound modes)

03 - Sets the unit into blackout on or off

04 - Sets the derby colour in manual mode (use the +/– to select a colour) - laser is always on in this mode

05 - Press to pause the running of auto or sound mode

06 - Auto program speed

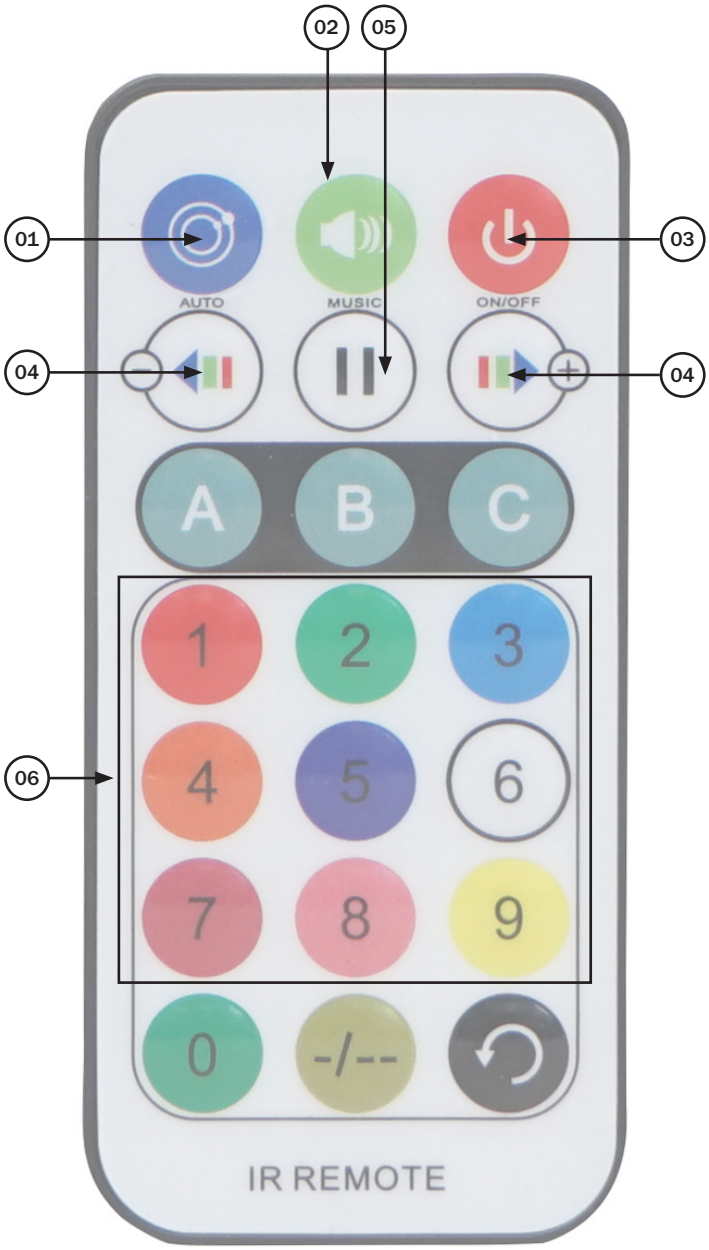

Wireless operation:

To operate the fixture (sold separately) wirelessly you will need to plug in the W-DMX Compatible USB Transceiver into the USB port on the rear of the fixture. W-DMX should also be set to "**ON**" in the fixtures settings (full instructions can be in the fixtures manual).

If using it in wireless DMX mode a compatible wireless DMX Transmitter (e.g. Wireless Solutions Sweden or Lumen Radio) will need to be connected.

The W-DMX Compatible USB Transceiver features 2 operating protocols as listed below.
The LED on the side of the dongle will illuminate a different colour for each operating protocol.

W-DMX G3 Transmit Protocol - Blue (when transmitting)

W-DMX Receive Protocol - Green (when receiving)

To set the dongle in one of these modes plug the W-DMX Compatible USB Transceiver into the USB port on the rear of the fixture. Press the button on the dongle whilst powering on the unit.
The LED will illuminate white for a brief moment and then change colour. You can then press the button which will scroll through the operating protocols. Once you have selected the chosen protocol, press and hold the button on the dongle for 3 seconds. The LED will illuminate white, then turn blue (transmit mode) or stay white (receive mode). The unit is now set in your chosen protocol.

W-DMX G3 Transmit Protocol:

Once in this protocol the LED will illuminate blue. This indicates the fixture is ready to pair with the receiver(s). Once all the receiver(s) have been set up press the button on the dongle once and the LED will flash blue quickly, this indicates it is attempting to pair with the receivers. Once pairing is complete the LED will illuminate static blue to indicate the fixture is transmitting signal.

To disconnect the transmitting fixture from all receiving fixtures within range when connected, hold the button on the transmitting fixtures dongle down for 3 seconds until the LED illuminates red.
This indicates the wireless memory has been cleared.

W-DMX Receive Protocol:

Once in this protocol the LED will illuminate white. This indicates a connection has not yet been established with the transmitter. Once the transmitter has been set up press the button on the transmitter fixtures dongle once or press the pair button on your wireless transceiver. The LED on the receiving units will flash green quickly, this indicates it is attempting to pair with the transmitter.
Once pairing is complete the LED will illuminate static green to indicate the fixture is receiving signal.

To disconnect the transmitting fixture from all receiving fixtures within range when connected, hold the button on the transmitting fixtures dongle down for 3 seconds until the LED illuminates white.
This indicates the wireless memory has been cleared.

If the indicator on the receiving units flashes red quickly this indicates that the signal from the transmitting fixture has been lost.

Setting the DMX address:

The DMX mode enables the use of a universal DMX controller. Each fixture requires a “start address” from 1- 512. A fixture requiring one or more channels for control begins to read the data on the channel indicated by the start address. For example, a fixture that occupies or uses 7 channels of DMX and was addressed to start on DMX channel 100, would read data from channels: 100, 101, 102, 103, 104, 105 and 106. Choose a start address so that the channels used do not overlap. E.g. the next unit in the chain starts at 107.

DMX 512:

DMX (Digital Multiplex) is a universal protocol used as a form of communication between intelligent fixtures and controllers. A DMX controller sends DMX data instructions form the controller to the fixture. DMX data is sent as serial data that travels from fixture to fixture via the DATA “IN” and DATA “OUT” XLR terminals located on all DMX fixtures (most controllers only have a data “out” terminal).

DMX linking:

DMX is a language allowing all makes and models of different manufactures to be linked together and operate from a single controller, as long as all fixtures and the controller are DMX compliant. To ensure proper DMX data transmission, when using several DMX fixtures try to use the shortest cable path possible. The order in which fixtures are connected in a DMX line does not influence the DMX addressing. For example; a fixture assigned to a DMX address of 1 may be placed anywhere in a DMX line, at the beginning, at the end, or anywhere in the middle. When a fixture is assigned a DMX address of 1, the DMX controller knows to send DATA assigned to address 1 to that unit, no matter where it is located in the DMX chain.

DATA cable (DMX cable) requirements (for DMX operation):

This fixture can be controlled via DMX-512 protocol. The DMX address is set on the back of the unit. Your unit requires a standard 3-pin XLR connector for data input/output, see images below.

Further DMX cables can be purchased from all good sound and lighting suppliers or Prolight Concepts dealers.

Please quote:	3-Pin:	**CABL10 – 2m**	**CABL11 – 5m**	**CABL12 – 10m**
	5-Pin:	**CABL185 – 2m**	**CABL187 – 5m**	**CABL188 – 10m**

Also remember that DMX cable must be daisy chained and cannot be split.

Notice:

Be sure to follow the diagrams below when making your own cables. Do not connect the cables shield conductor to the ground lug or allow the shield conductor to come in contact with the XLRs outer casing. Grounding the shield could cause a short circuit and erratic behaviour.

Pin Configuration	
3-Pin	5-Pin
Pin 1 - Ground	
Pin 2 - Negative	
Pin 3 - Positive	
–	Pin 4 - N/C
–	Pin 5 - N/C

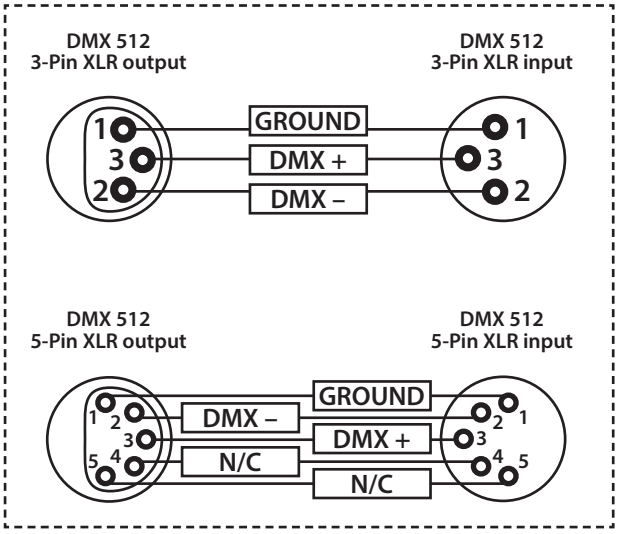

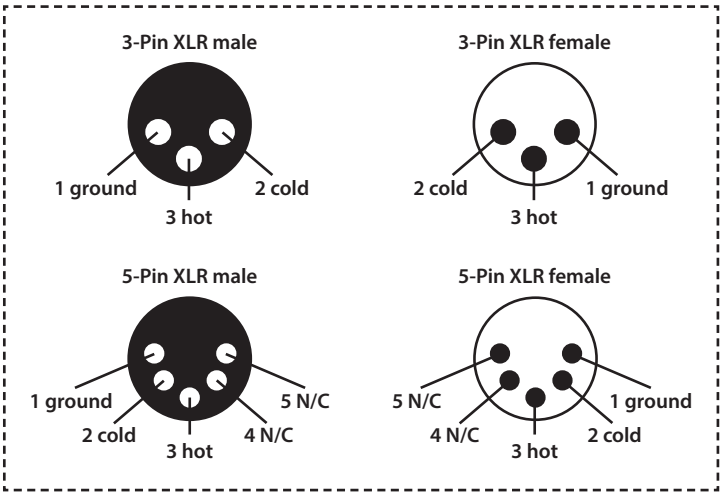

Line termination:

When longer runs of cable are used, you may need to use a terminator on the last unit to avoid erratic behaviour.

Using a cable terminator will decrease the possibilities of erratic behaviour. (3-pin - Order ref: CABL90, 5-pin - Order ref: CABL89)

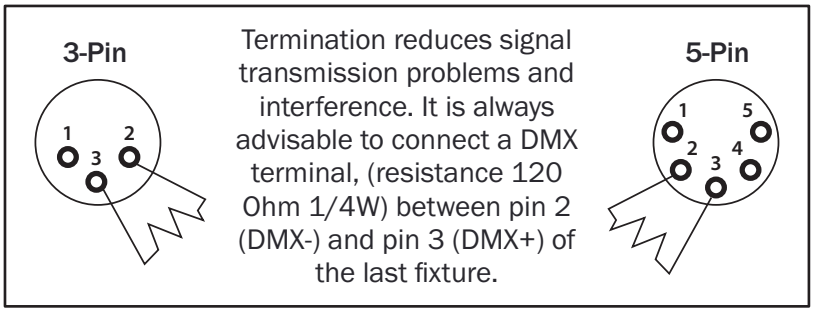

5-pin XLR DMX connectors:

Some manufactures use 5-pin XLR connectors for data transmission in place of 3-pin. 5-pin XLR fixtures may be implemented in a 3-pin XLR DMX line. When inserting standard 5-pin XLR connectors in to a 3-pin line a cable adaptor must be used. The diagram below details the correct cable conversion.

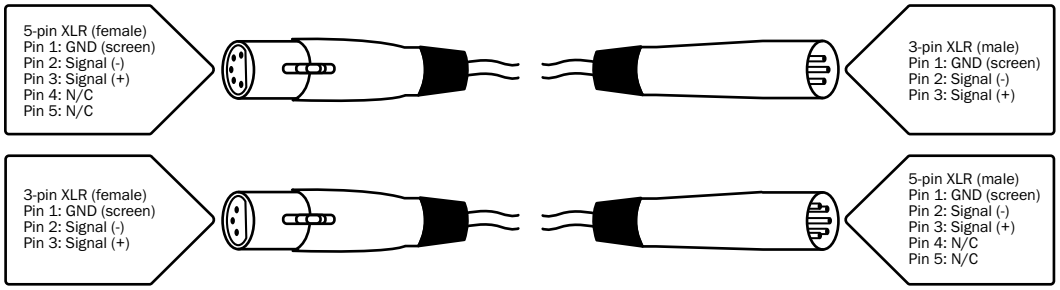

Correct Disposal of this Product (Waste Electrical & Electronic Equipment)

(Applicable in the European Union and other European countries with separate collection systems)

This marking shown on the product or its literature, indicates that it should not be disposed of with other household wastes at the end of its working life. To prevent possible harm to the environment or human health from uncontrolled waste disposal, please separate this from other types of wastes and recycle it responsibly to promote the sustainable reuse of material resources.

Household users should contact either the retailer where they purchased this product, or their local government office, for details of where and how they can take this item for environmentally safe recycling.

Business users should contact their supplier and check the terms and conditions of the purchase contract. This product should not be mixed with other commercial wastes for disposal.